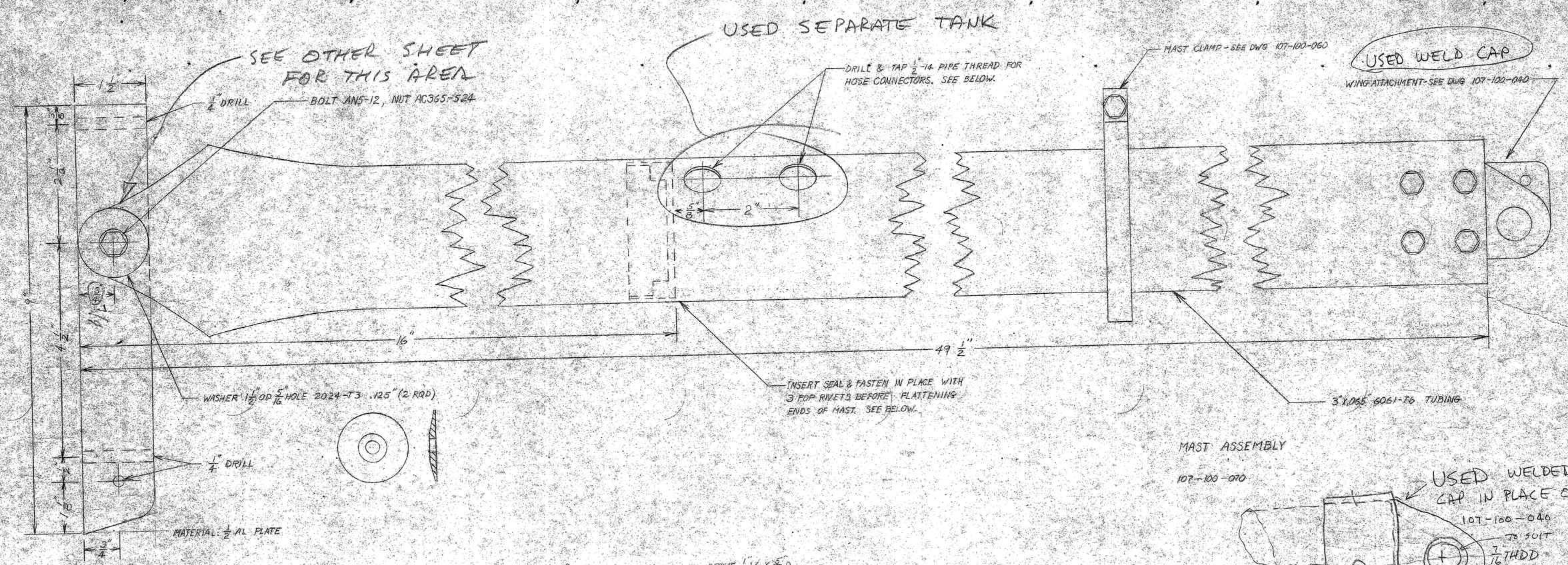

MAST ASSEMBLY

107-100-070

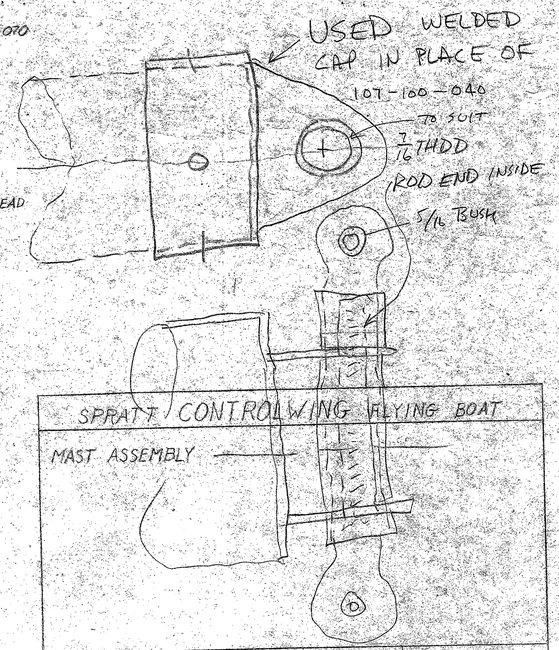

MAST ANCHOR

107-100-073

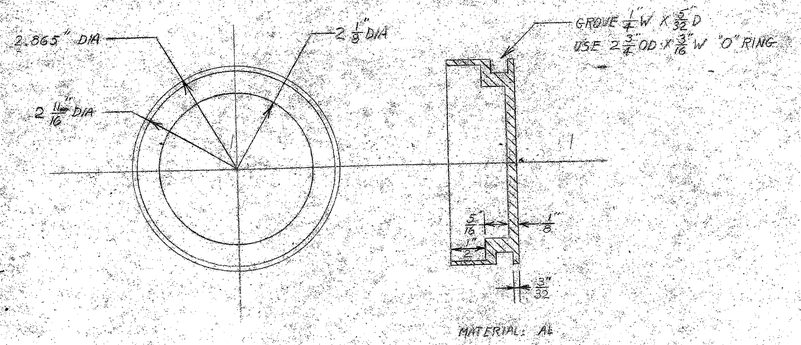

EXPANSION TANK SEAL 1 MADE - BUT NOT USED

107-100-072

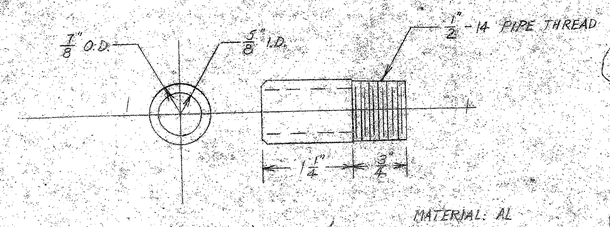

HOSE CONNECTOR (2 RQD)

107-100-071

SPRATT CONTROLWING FLYING BOAT

MAST ASSEMBLY

DWG. NO. 107-100-070/073	DATE 10-16-72	SCALE FULL

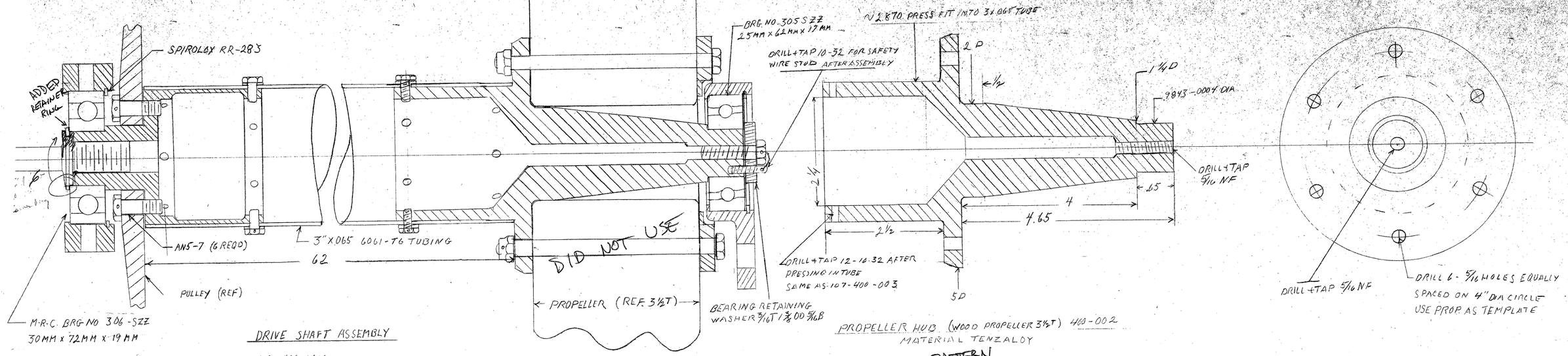

DRIVE SHAFT ASSEMBLY

107-400-001

PROPELLER HUB (WOOD PROPELLER 3½T) 400-002

MATERIAL TENZALOY

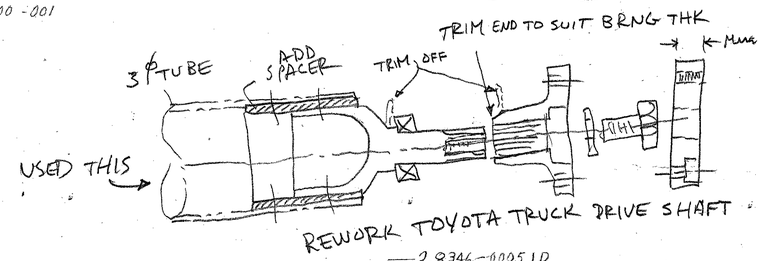

REWORK TOYOTA TRUCK DRIVE SHAFT

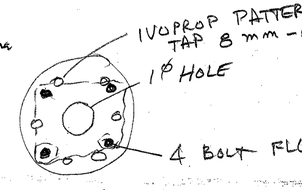

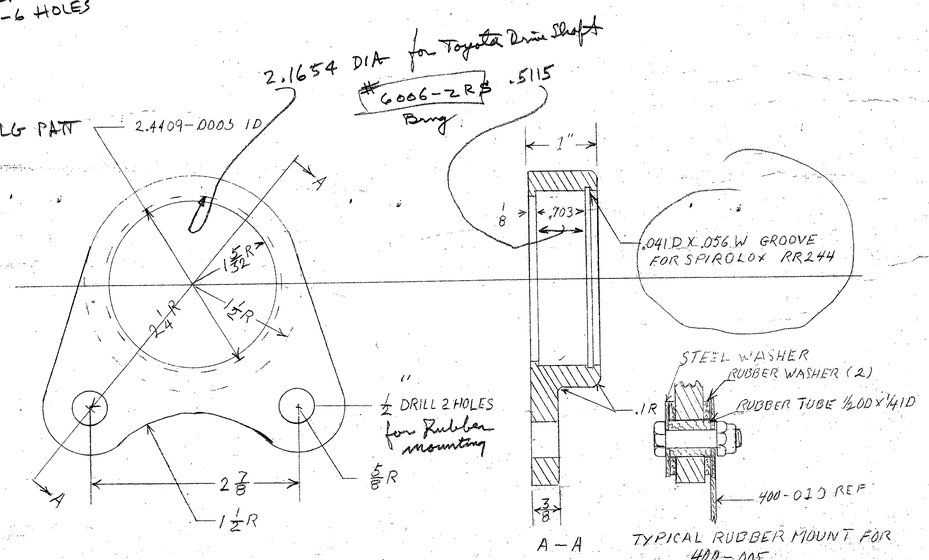

MATERIAL: AL

PROPELLER BEARING HOUSING

107-400-005

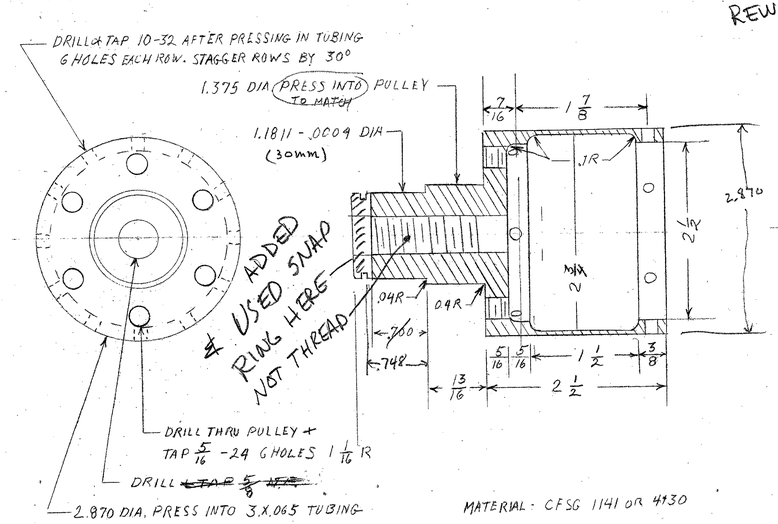

MATERIAL: CFSG 1141 OR 4130

PULLEY STUB

107-400-003

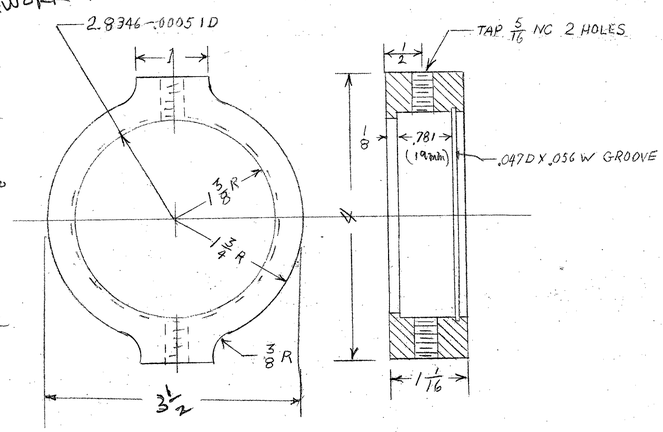

MATERIAL: AL

PULLEY BEARING HOUSING

107-400-004

DID NOT USE THIS PUMP DRIVE

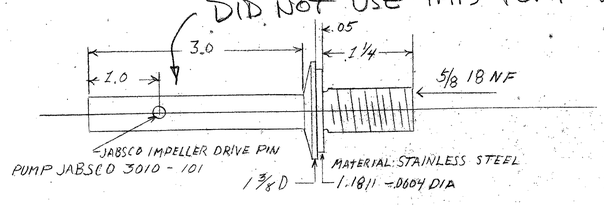

COMBINED PUMP SHAFT + BEARING RETAINER 400-006

SPRATT CONTROLWING FLYING BOAT		
DRIVE SHAFT ASSEMBLY PROPELLER STUB (HUB) PULLEY STUB BEARING HOUSINGS		
DWG NO. 107-400-004/006	DATE 11-20-74	SCALE: FULL

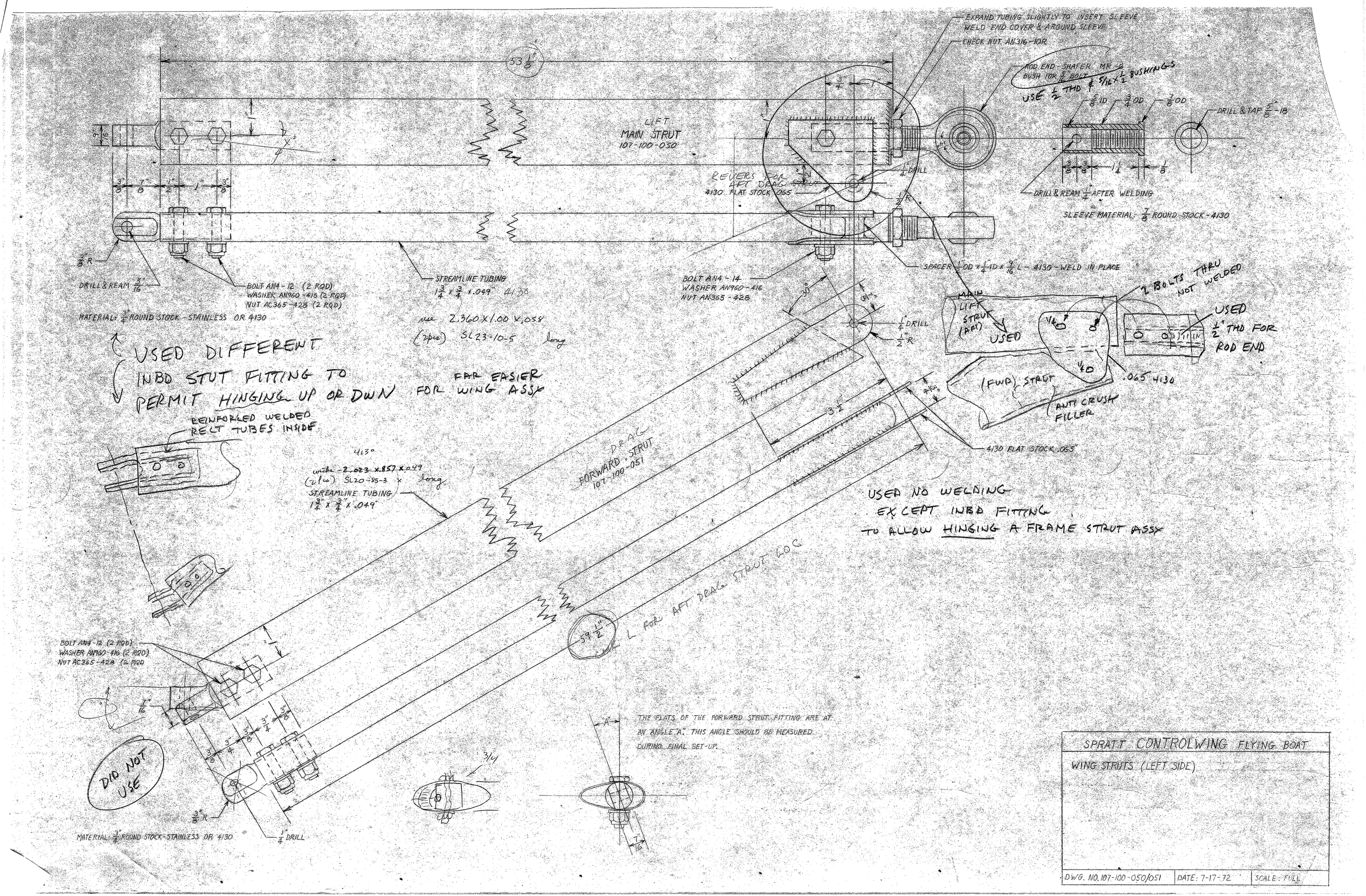

SPRATT CONTROLWING FLYING BOAT		
WING STRUTS (LEFT SIDE)		
DWG. NO. 107-100-050/051	DATE: 7-17-72	SCALE: FULL

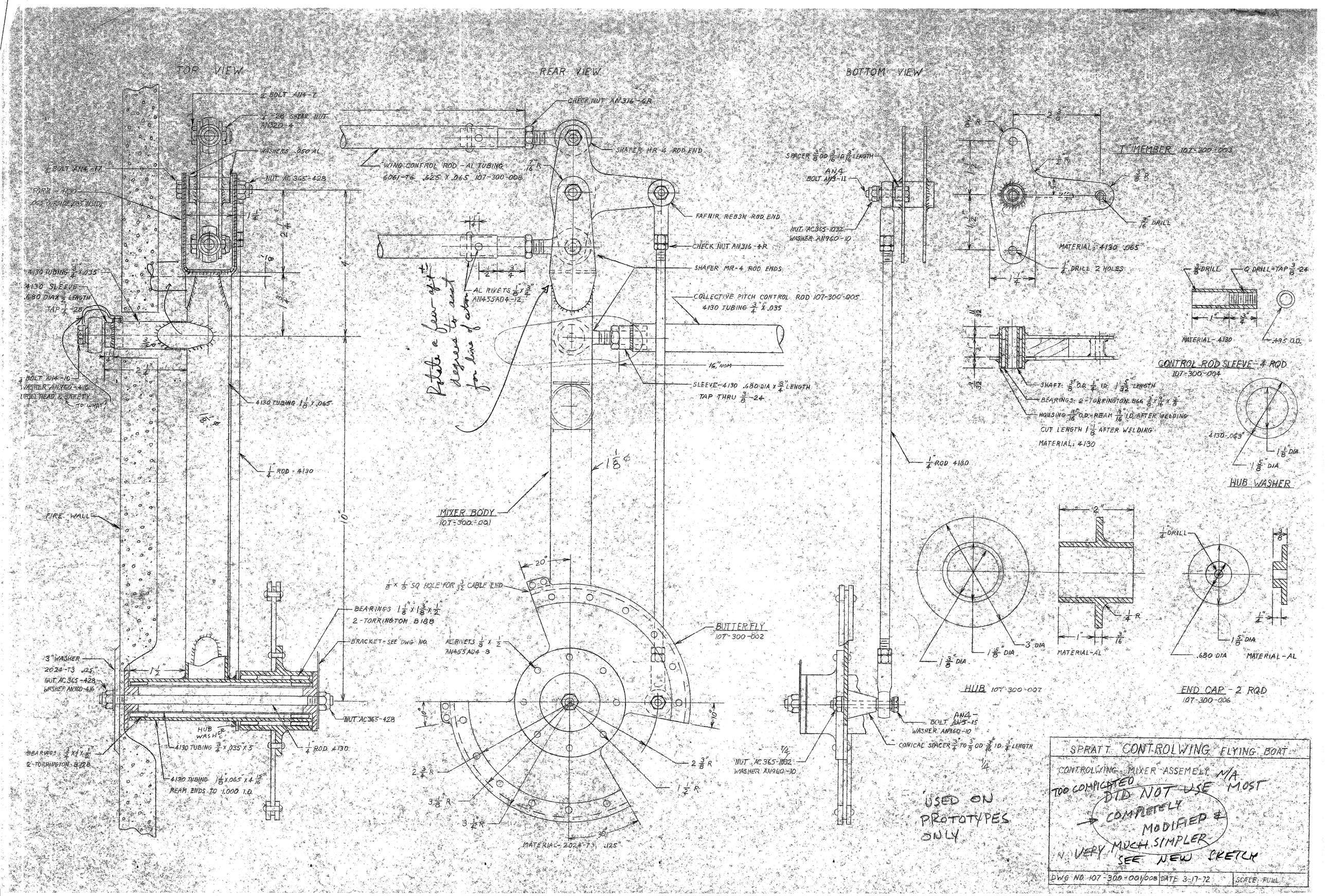
TOP VIEW
REAR VIEW
BOTTOM VIEW
1/2 BOLT AN4-7
1/4-28 SHEAR NUT AN320-4
WASHERS .050 AL
1/2 BOLT AN4-17
NUT AC365-428
FORK - 4130 .065" OUTSIDE & INSIDE
4130 TUBING 3/4 X .035
4130 SLEEVE .680 DIA X 1/2 LENGTH TAP 1/4-28
1/4 BOLT AN4-10 WASHER AN960-416 DRILL HEAD & SAFETY TO WHAT?
4130 TUBING 1 1/8 X .065
1/4 ROD - 4130
FIRE WALL
3" WASHER 2024-T3 .125"
NUT AC365-428 WASHER AN960-416
BEARINGS 3/4 X 1 X 1/2 2-TORRINGTON B128
HUB WASHER
4130 TUBING 3/4 X .035 X 3"
4130 TUBING 1 1/8 X .065 X 4 12/16" REAM ENDS TO 1.000 I.D.
NUT AC365-428
1/4 ROD 4130
WING CONTROL ROD - AL TUBING 6061-T6 .625 X .065 107-300-008
CHECK NUT AN316-6R
SHAFER MR-4 ROD END
7/16 R
FAFNIR REB3N ROD END
CHECK NUT AN316-4R
SHAFER MR-4 ROD ENDS
AL RIVETS 1/8 X 3/4 AN455AD4-12
COLLECTIVE PITCH CONTROL ROD 107-300-005 4130 TUBING 3/4 X .035
16" NOM
SLEEVE-4130 .680 DIA X 3/4 LENGTH TAP THRU 3/8-24
Rotate a few-of-+ degrees to avoid for line of ctr
1 1/8 ϕ
MIXER BODY 107-300-001
20°
1/8 X 1/8 SQ HOLE FOR 3/32 CABLE END
BEARINGS 1 1/8 X 1 3/8 X 1/2 2-TORRINGTON B188
BRACKET - SEE DWG NO.
AL RIVETS 1/8 X 1/2 AN455AD4-8
BUTTERFLY 107-300-002
2 3/8" R
1 1/2" R
2 3/4 R
3 3/8 R
3 1/4 R
30°
MATERIAL - 2024-T3 .125"
SPACER 3/8 OD 3/16 ID 3/16 LENGTH
AN4 BOLT AN3-11
NUT AC365-1032 WASHER AN960-10
T MEMBER 107-300-003
1/2 R
3/8 R
3/16 DRILL
MATERIAL: 4130 .065"
1/4 DRILL 2 HOLES
SHAFT: 3/8 O.D. 1/4" I.D. 1 5/32" LENGTH
BEARINGS: 2-TORRINGTON B66 3/8 X 1/16 X 3/8
HOUSING 11/16 O.D. REAM 3/16 I.D. AFTER WELDING
CUT LENGTH 1 1/8" AFTER WELDING
MATERIAL: 4130
1/4 ROD 4130
3/8 DRILL
Q DRILL-TAP 3/8-24
MATERIAL - 4130
.495 O.D.
CONTROL ROD SLEEVE - 4 ROD 107-300-004
4130-.063"
1 1/8 DIA
1 5/8 DIA
HUB WASHER
3" DIA
1 5/8" DIA
1 3/8" DIA
HUB 107-300-007
1/4 DRILL
1/4 R
MATERIAL - AL
1 5/8" DIA
.680 DIA
MATERIAL - AL
END CAP - 2 RQD 107-300-006
BOLT AN4-15 WASHER AN960-10
CONICAL SPACER 3/4 TO 3/8 OD 3/16 ID 3/4 LENGTH
NUT AC365-1032 WASHER AN960-10
USED ON PROTOTYPES ONLY
SPRATT CONTROLWING FLYING BOAT
CONTROLWING MIXER ASSEMBLY N/A
TOO COMPLICATED
DID NOT USE MOST
COMPLETELY MODIFIED & VERY MUCH SIMPLER - SEE NEW SKETCH
DWG NO. 107-300-001/008
DATE 3-17-72
SCALE: FULL

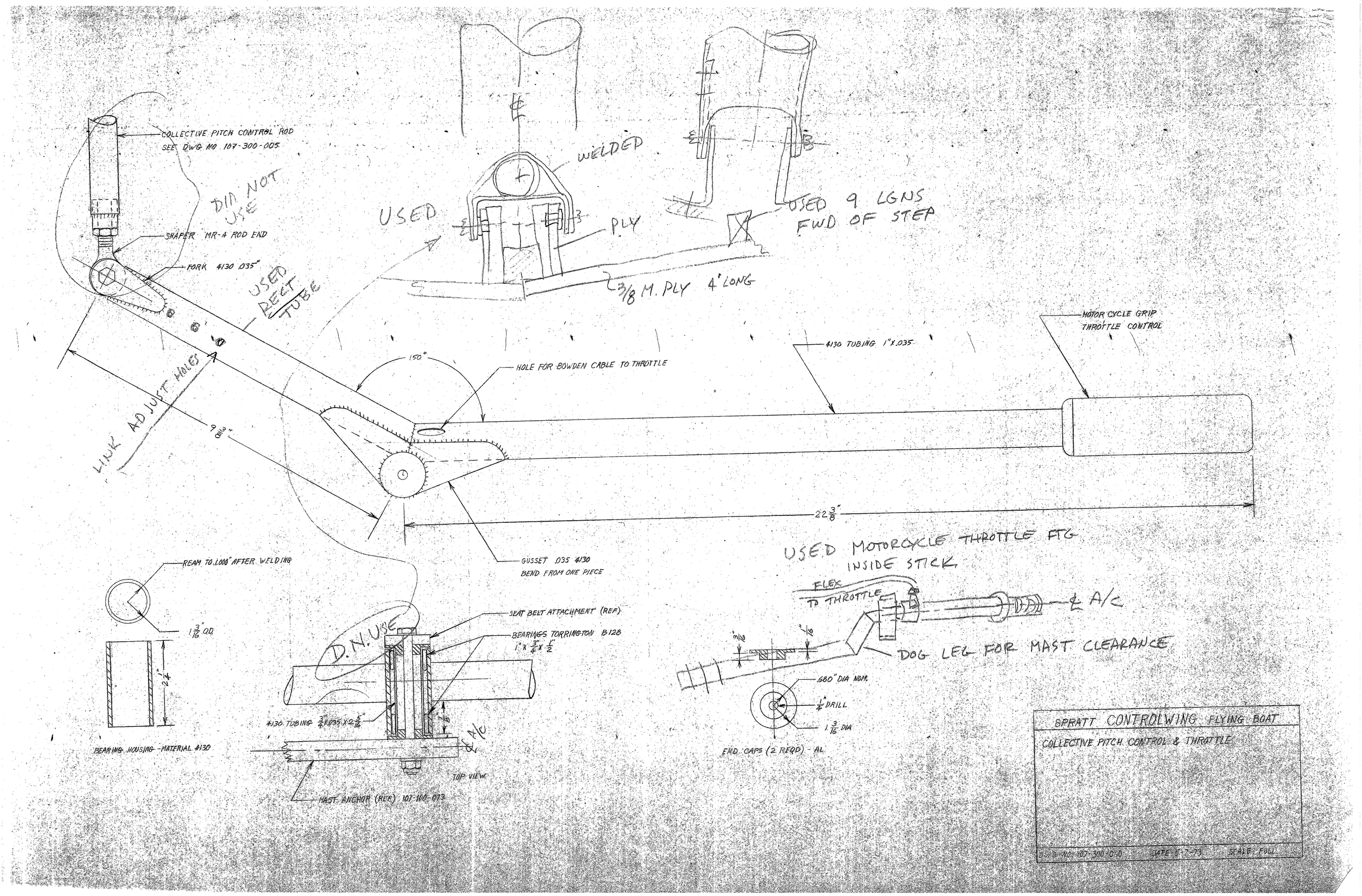
COLLECTIVE PITCH CONTROL ROD
SEE DWG NO 107-300-005
DID NOT USE
SHAPER MR-4 ROD END
FORK 4130 .035"
USED REET TUBE
LINK ADJUST HOLES
9 DIA
150°
HOLE FOR BOWDEN CABLE TO THROTTLE
4130 TUBING 1"X.035
MOTOR CYCLE GRIP THROTTLE CONTROL
22 3/8"
GUSSET .035 4130
BEND FROM ONE PIECE
WELDED
USED
PLY
3/8 M. PLY 4' LONG
USED 9 LGNS FWD OF STEP
USED MOTORCYCLE THROTTLE FTG INSIDE STICK
FLEX TO THROTTLE
℄ A/C
DOG LEG FOR MAST CLEARANCE
3/16"
1/16"
.680" DIA NOM.
1/4" DRILL
1 3/16 DIA
END CAPS (2 REQD) - AL
REAM TO 1.000" AFTER WELDING
1 3/16" O.D.
2 1/4"
BEARING HOUSING - MATERIAL 4130
D.N. USE
SEAT BELT ATTACHMENT (REF)
BEARINGS TORRINGTON B128
1" X 3/4" X 1/2"
4130 TUBING 3/4" X .035 X 2 5/16"
1 3/8
℄ A/C
TOP VIEW
MAST ANCHOR (REF) 107-100-073
SPRATT CONTROLWING FLYING BOAT
COLLECTIVE PITCH CONTROL & THROTTLE
DWG NO 107-300-040
DATE 5-7-73
SCALE FULL

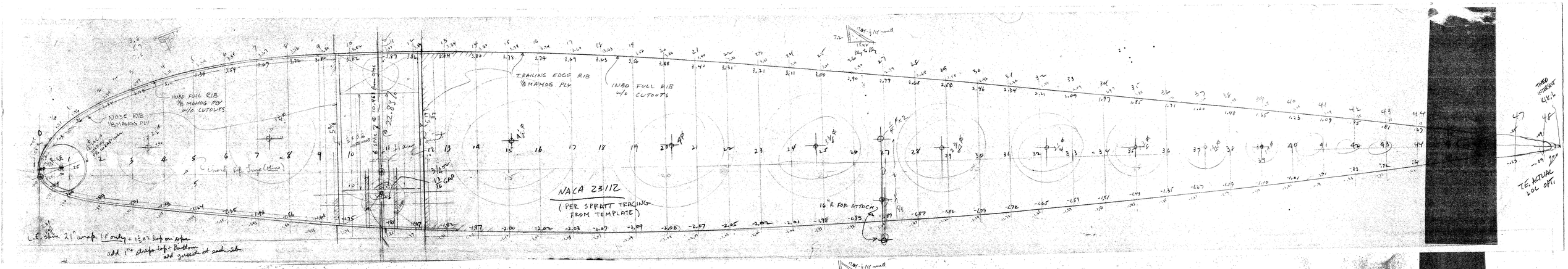
TRAILING EDGE RIB
1/8 MAHOG PLY
INBD FULL RIB
W/O CUTOUTS
INBD FULL RIB
1/8 MAHOG PLY
W/O CUTOUTS
NOSE RIB
1/8 MAHOG PLY
NACA 23112
(PER SPRATT TRACING
FROM TEMPLATE)
16" R FOR ATTACH
T.E. ACTUAL
LOC OPT.

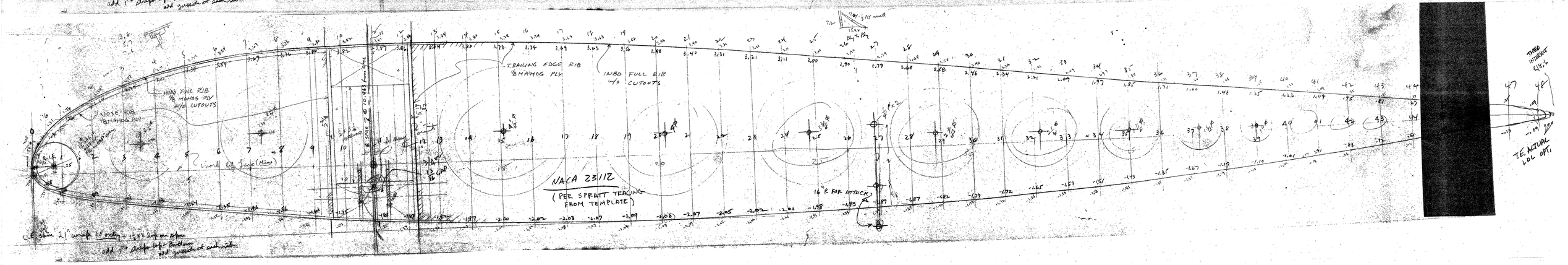
TRAILING EDGE RIB
1/8 MAHOG PLY
INBD FULL RIB
W/O CUTOUTS
INBD FULL RIB
1/8 MAHOG PLY
W/O CUTOUTS
NOSE RIB
1/8 MAHOG PLY
NACA 23112
(PER SPRATT TRACING
FROM TEMPLATE)
16" R FOR ATTACH
T.E. ACTUAL
LOC OPT.

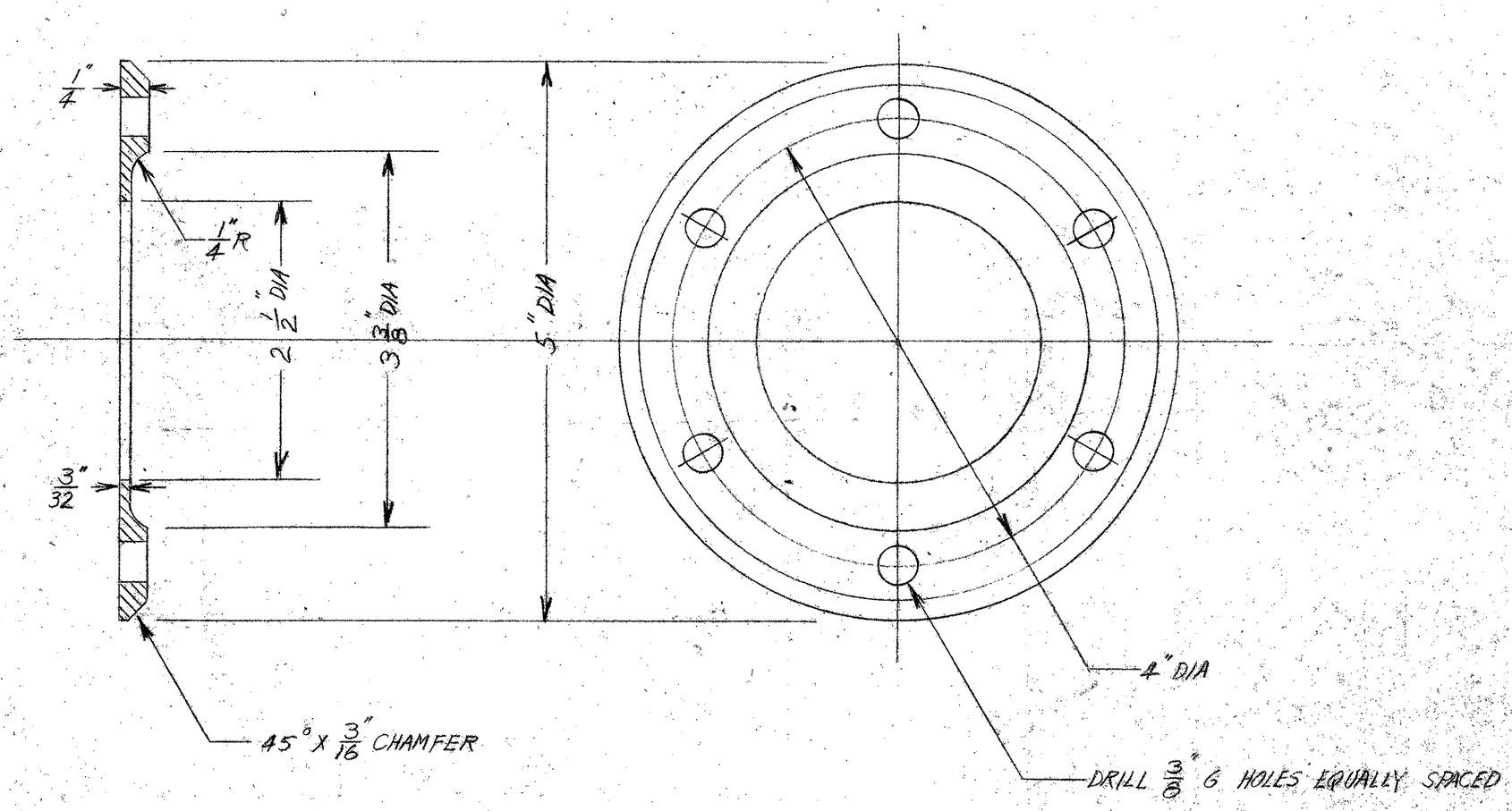

USED IVOPROP
& MODIFIED TOYOTA
DRIVE SHAFT FTG.

MATERIAL - 4130

SPRATT CONTROLWING FLYING BOAT		
WOODEN PROP RING		
DWG NO: 107-406-007	DATE: 8-30-73	SCALE: FULL

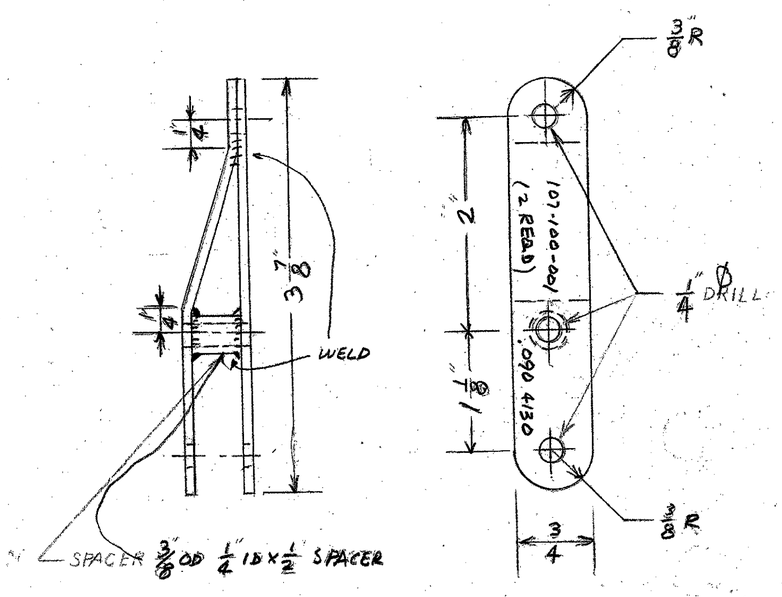

CONTROL ROD FITTING (2 REQD)

107-100-001

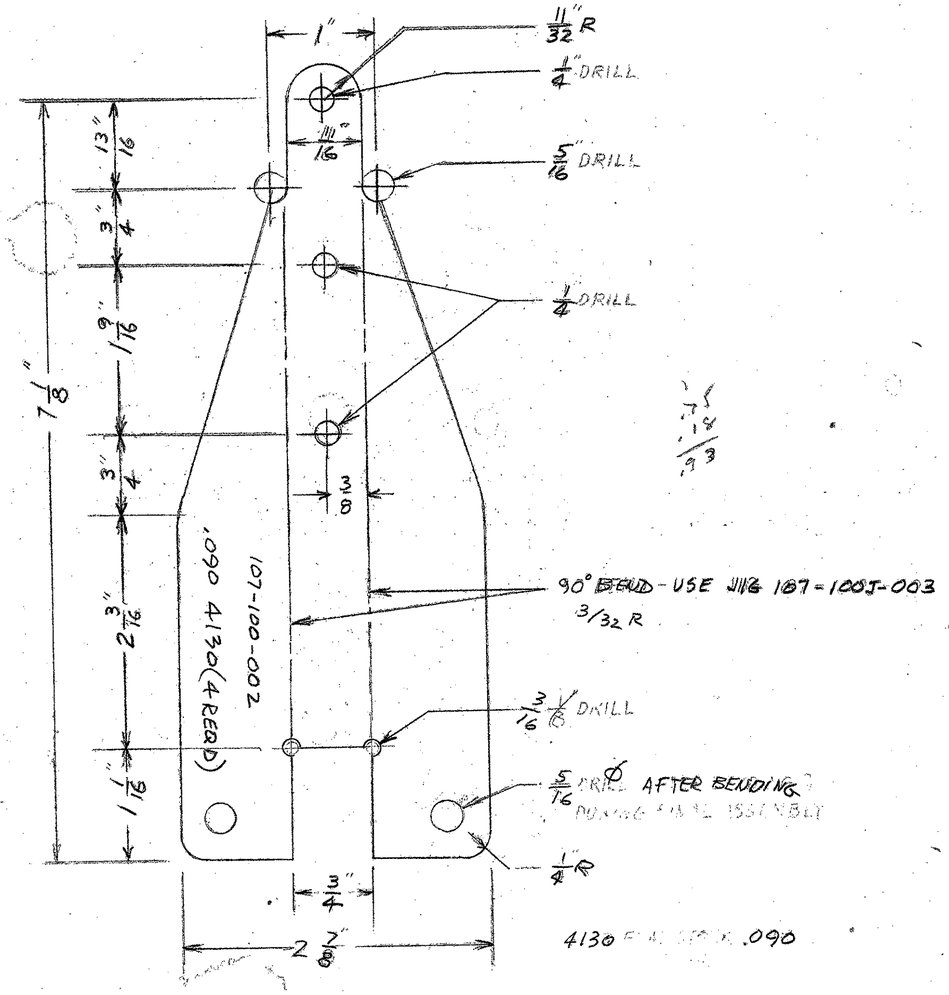

STRUT FITTING (4 REQD)

107-100-002

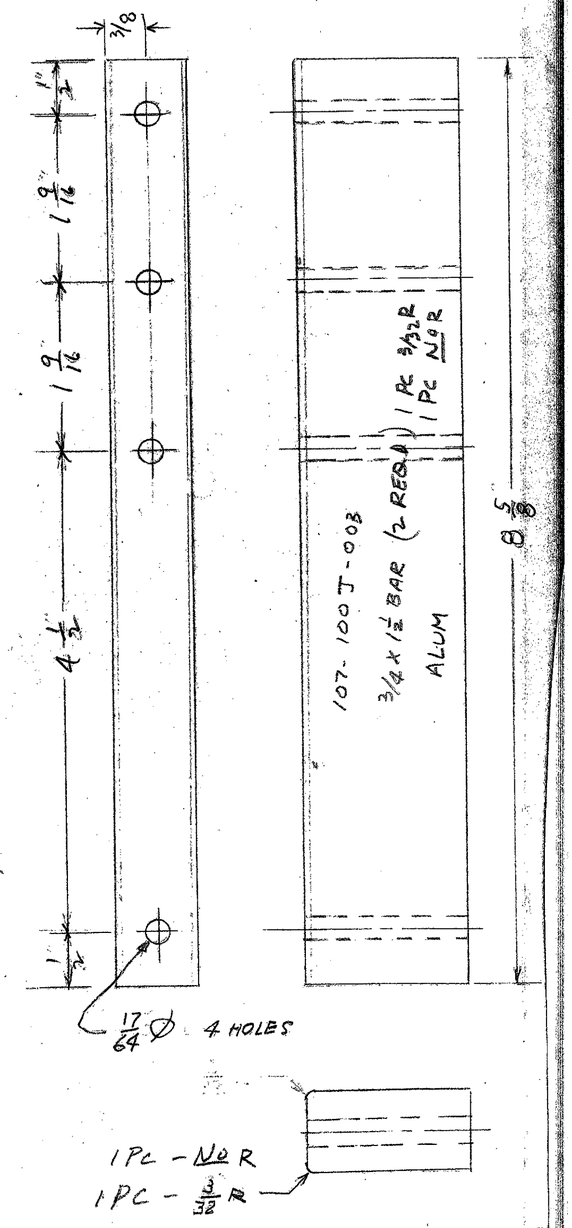

BENDING JIG (2 REQD)

107-100J-003

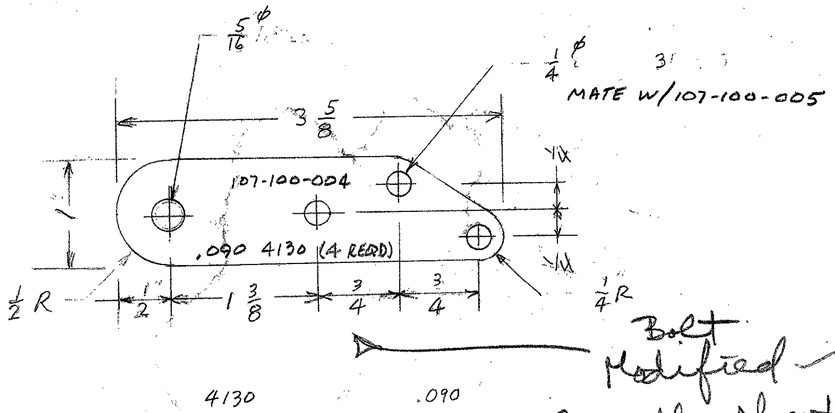

ROOT END FITTING (4 REQ)

107-100-004

Bolt Modified
See other sheet

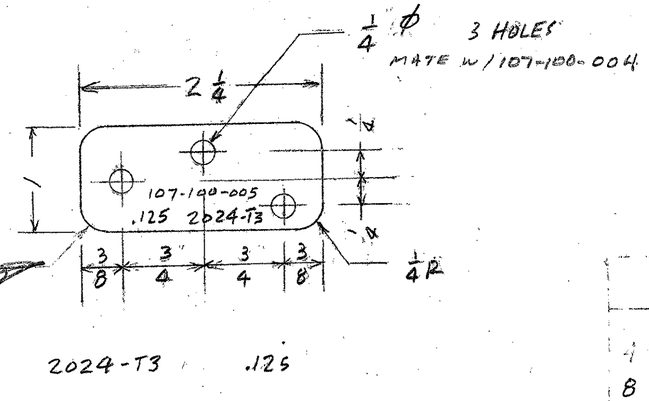

ROOT END PLATE (4 REQD)

107-100-005

SPRATT CONTROLWING FLYING BOAT

4 WING FITTINGS:
8 ROOT END
2 CONTROL ROD
4 STRUT FTG

DWG # 107 100 001/005 DATE 3-7-72 SCALE: FULL

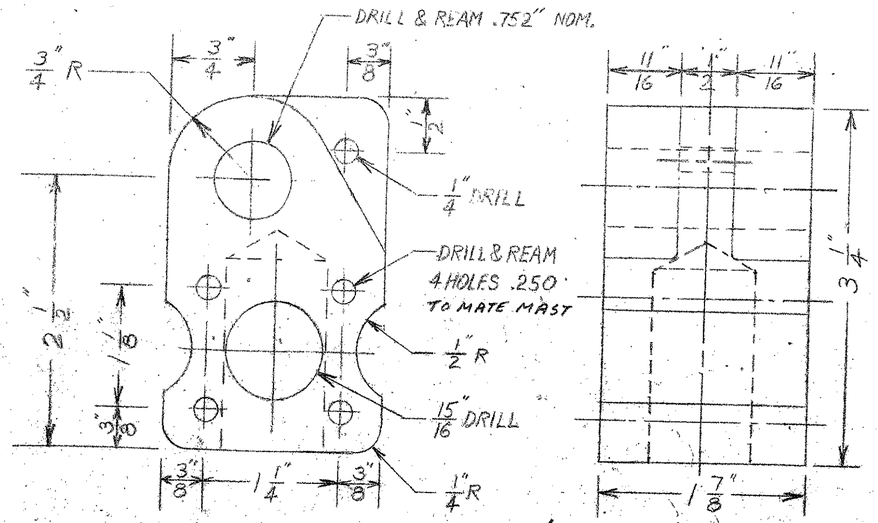

(USED WELDED MAST CAP)

1 MADE - NOT USED
(ITS AVAILABLE)

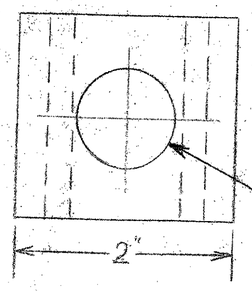

WING ATTACHMENT BLOCK - ALUMINUM

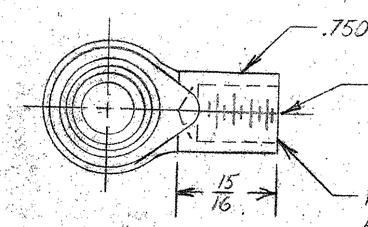

IF ABOVE BLOCK USED

MACHINE LENGTH SO THAT BOTH ROD ENDS ARE VERTICAL WHEN TIGHTENED ON STUD. ROD ENDS REMAIN FREE TO ROTATE IN BLOCK.

HEIM HF-8 ROD END - MODIFY AS SHOWN (2 RQD)

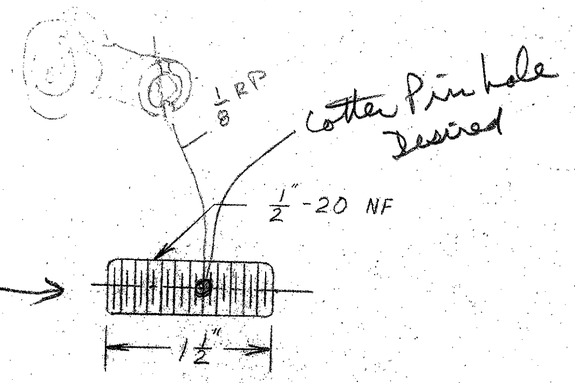

STUD (1 RQD) - 4130

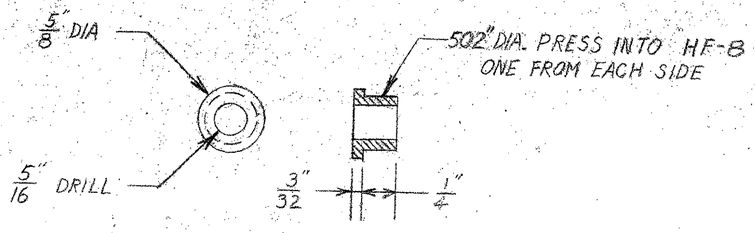

INSERTS FOR HF-8 (4 RQD) - 4130

USED WELDED CAP +
LONGER STUD + 7/16 ROD ENDS
TO PERMIT FOLDING WING
ABOUT MAST ATTACH WITH T.E. UP,
BUT ELECTED NOT TO ~~DO THIS~~ FOLD -

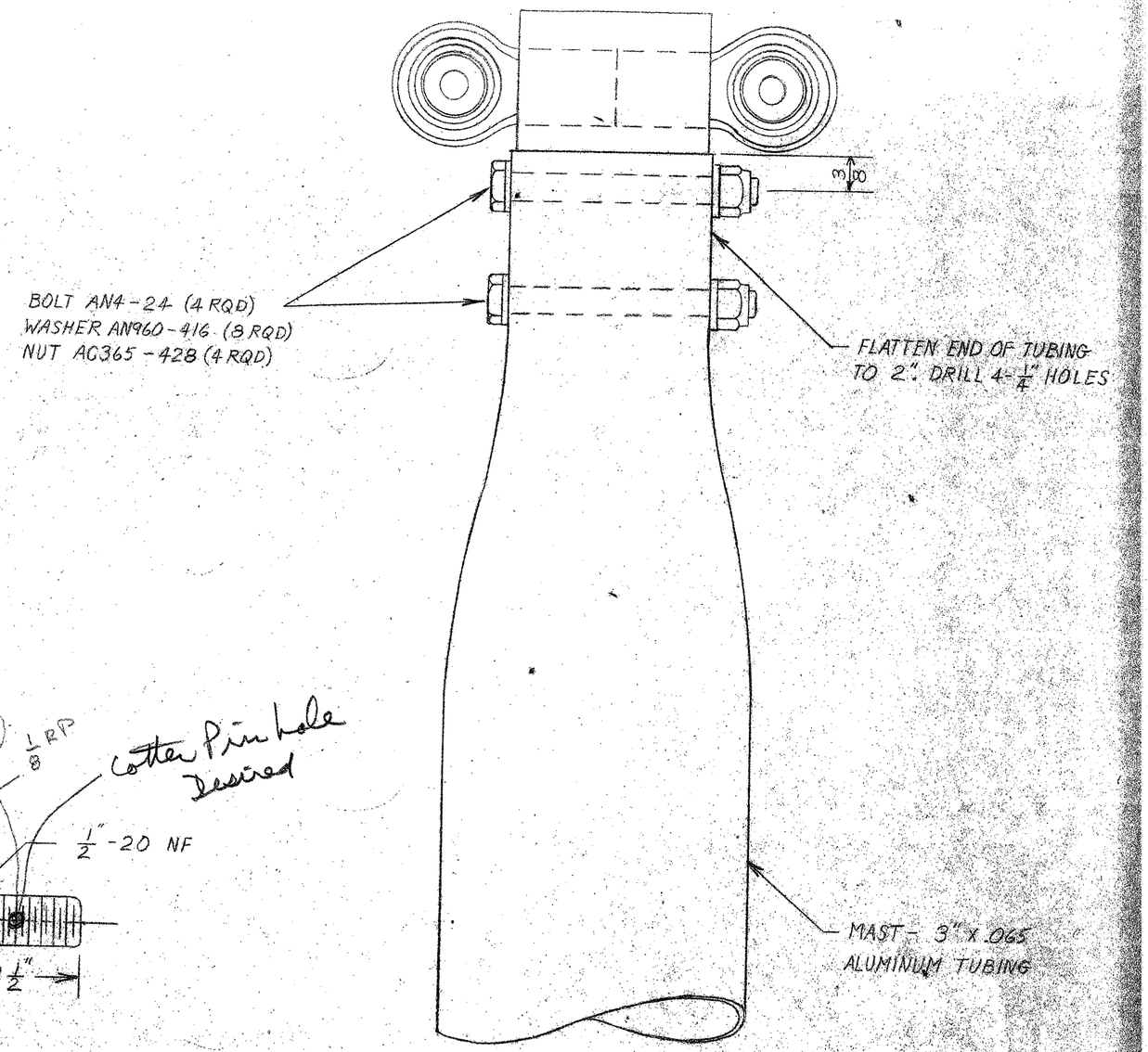

SPRATT CONTROLWING FLYING BOAT

WING ATTACHMENT TO MAST

DWG NO. 107-100-040 | DATE 7-16-70

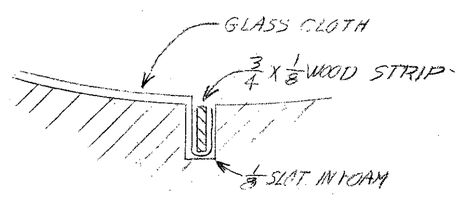

CONCAVE DECK HOLD-DOWN

E

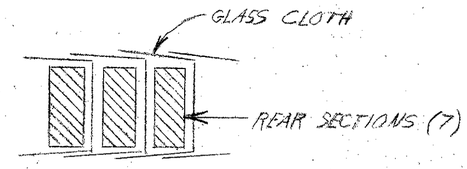

REINFORCEMENT DETAIL OF REAR OF HULL

D

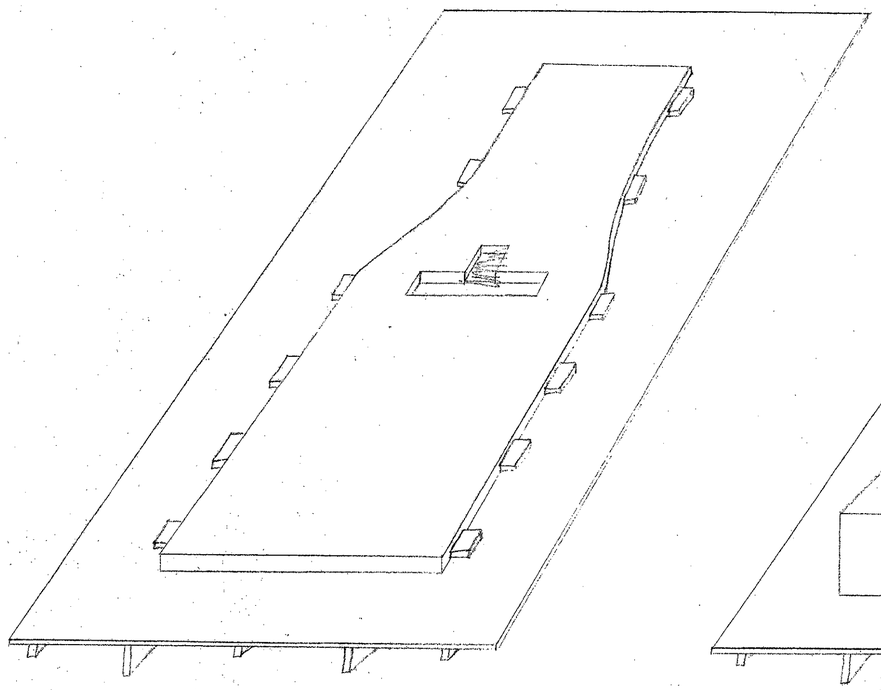

A

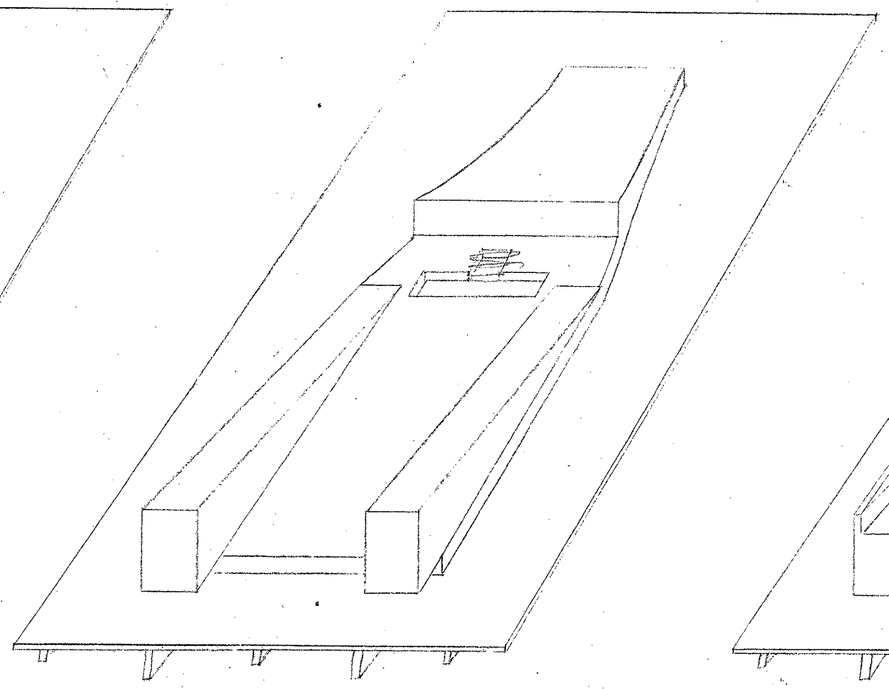

B

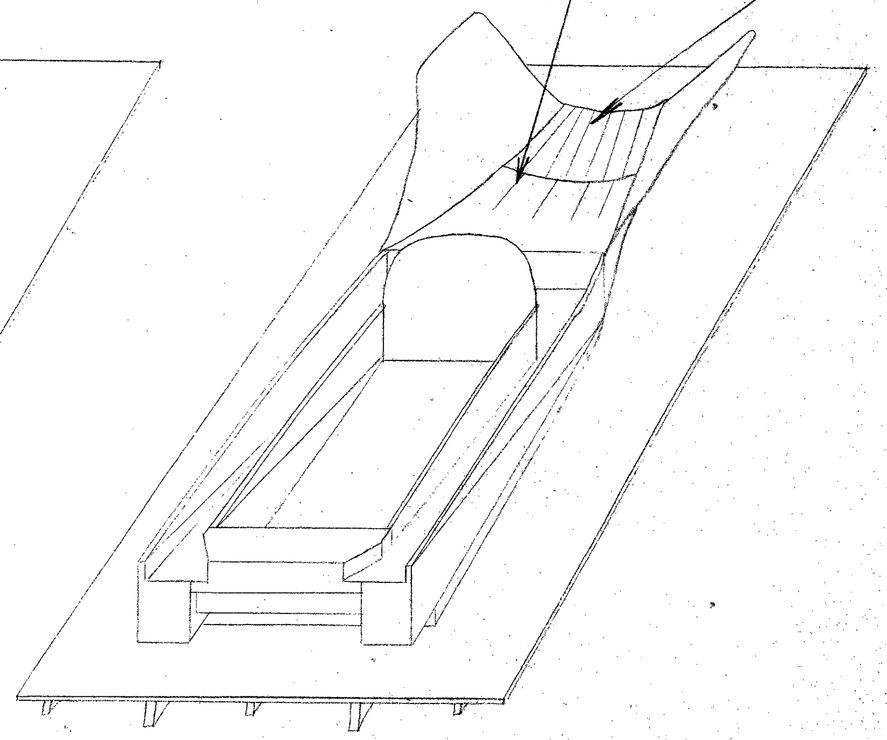

C

FOAM HULL CONSTRUCTION

107-200 SK -0K

5-25-73

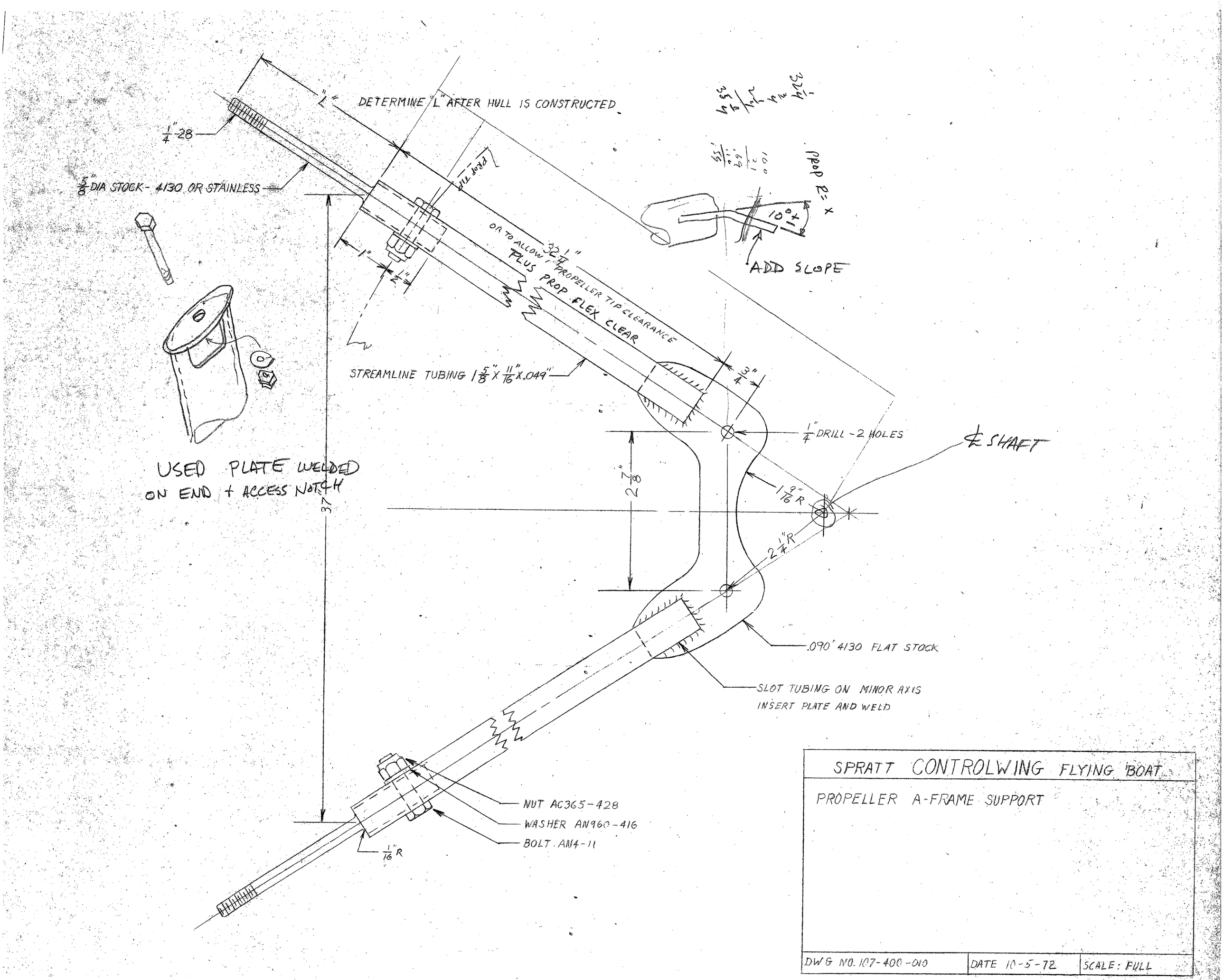

SPRATT CONTROLWING FLYING BOAT		
PROPELLER A-FRAME SUPPORT		
DWG NO. 107-400-010	DATE 10-5-72	SCALE: FULL

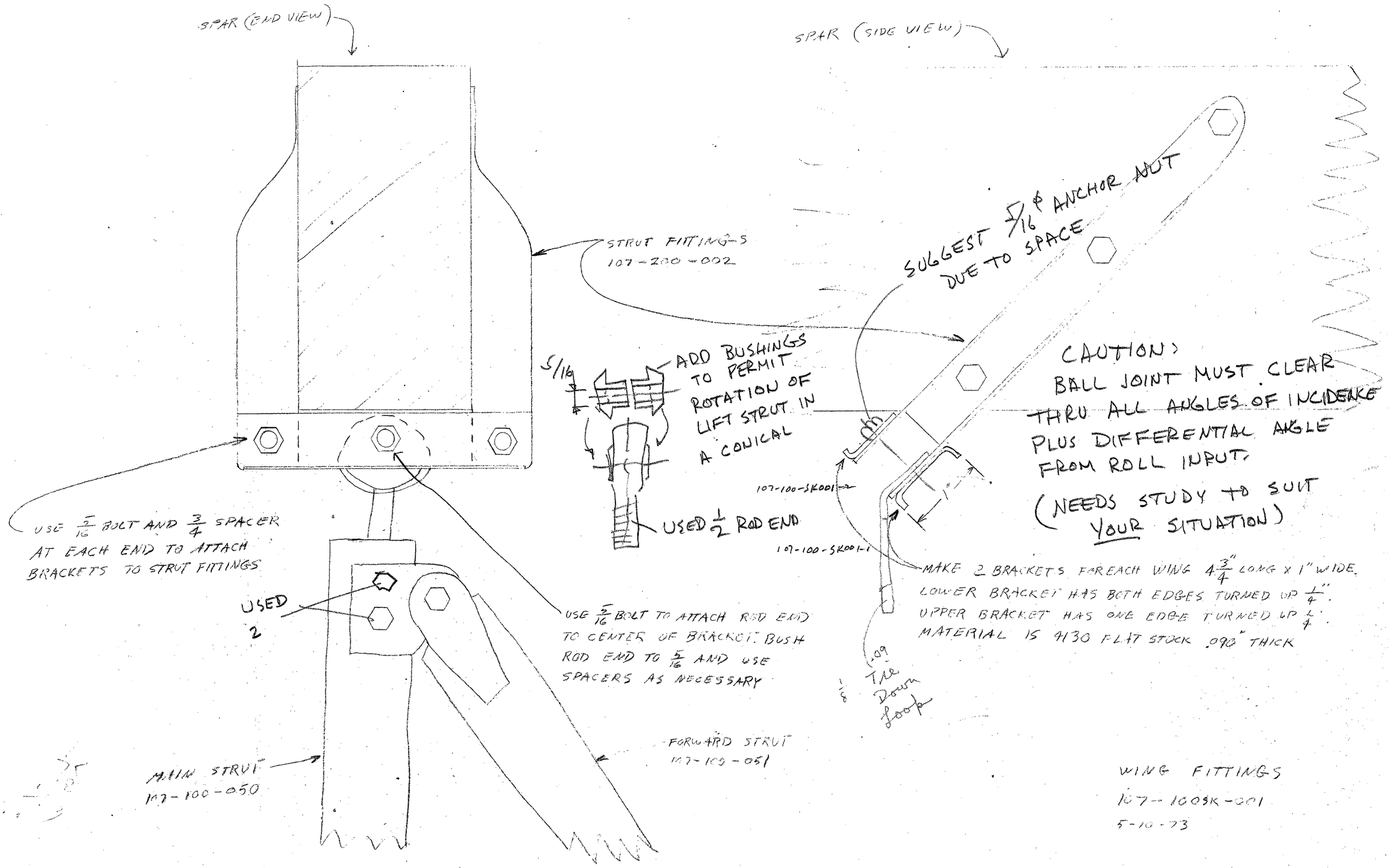
SPAR (END VIEW)
SPAR (SIDE VIEW)
STRUT FITTINGS
107-200-002
SUGGEST 5/16 ⌀ ANCHOR NUT
DUE TO SPACE
5/16
ADD BUSHINGS
TO PERMIT
ROTATION OF
LIFT STRUT IN
A CONICAL
USED 1/2 ROD END
107-100-SK001-2
107-100-SK001-1
1"
CAUTION:
BALL JOINT MUST CLEAR
THRU ALL ANGLES OF INCIDENCE
PLUS DIFFERENTIAL ANGLE
FROM ROLL INPUT.
(NEEDS STUDY TO SUIT
YOUR SITUATION)
USE 5/16 BOLT AND 3/4 SPACER
AT EACH END TO ATTACH
BRACKETS TO STRUT FITTINGS
USED
2
USE 5/16 BOLT TO ATTACH ROD END
TO CENTER OF BRACKET. BUSH
ROD END TO 5/16 AND USE
SPACERS AS NECESSARY
MAKE 2 BRACKETS FOR EACH WING 4 3/4" LONG x 1" WIDE.
LOWER BRACKET HAS BOTH EDGES TURNED UP 1/4".
UPPER BRACKET HAS ONE EDGE TURNED UP 1/4".
MATERIAL IS 4130 FLAT STOCK .093" THICK
.09
1/8
Tie
Down
loop
FORWARD STRUT
107-100-051
MAIN STRUT
107-100-050
WING FITTINGS
107-100SK-001
5-10-73

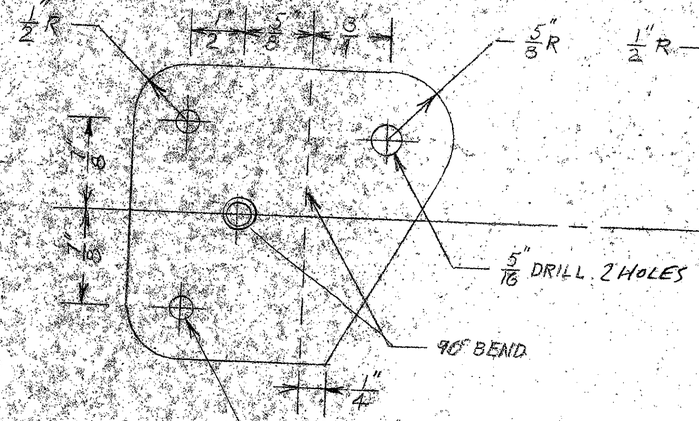

MATERIAL 4130 .090"

ANGLE (4 RQD - 2 RH 2LH)

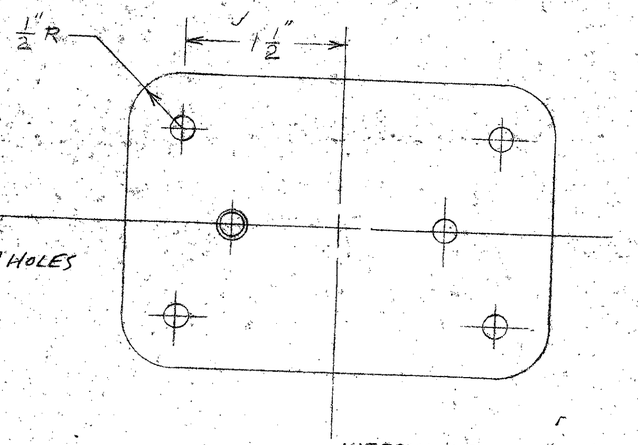

MATERIAL 4130 .065"

BACK-UP PLATE (2 RQD)

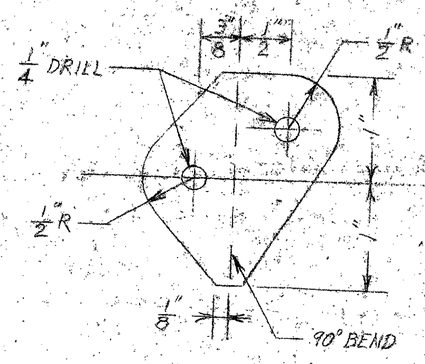

MATERIAL: 4130 .065"

ANGLE (4 RQD - 2 RH 2LH)

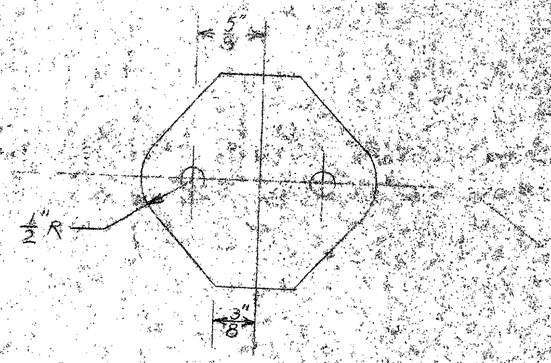

MATERIAL 4130 .065"

BACK-UP PLATE (2 RQD)

DRILL HOLES AFTER WELDING

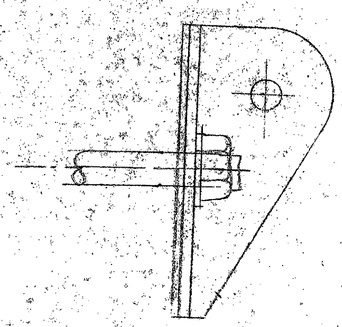

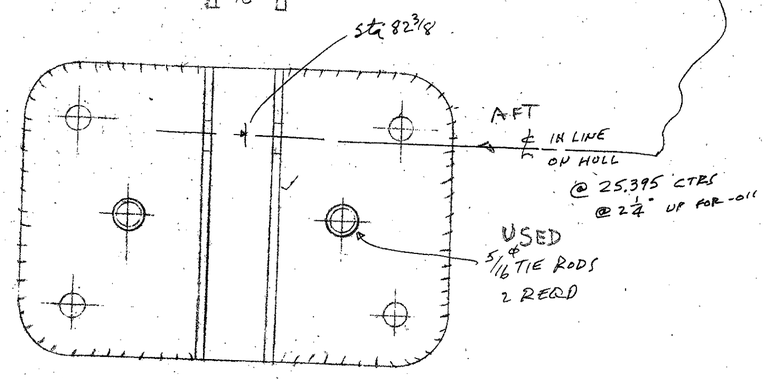

MAIN STRUT HULL FITTING (2 RQD)

107-200-010

DRILL HOLES AFTER WELDING

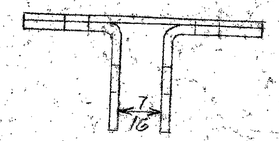

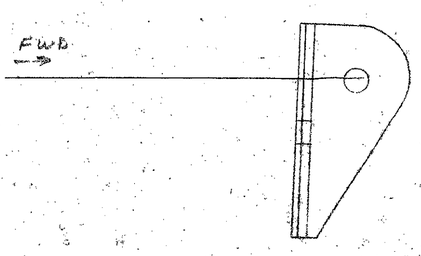

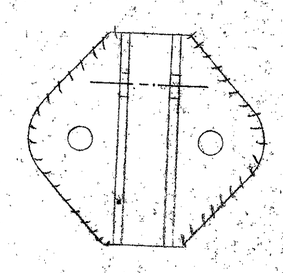

FORWARD STRUT HULL FITTING (2 RQD)

107-200-011

SPRATT CONTROLWING FLYING BOAT

HULL FITTINGS FOR WING STRUTS

DWG. NO. 107-200-010/011	DATE: 10-23-72	SCALE: FULL

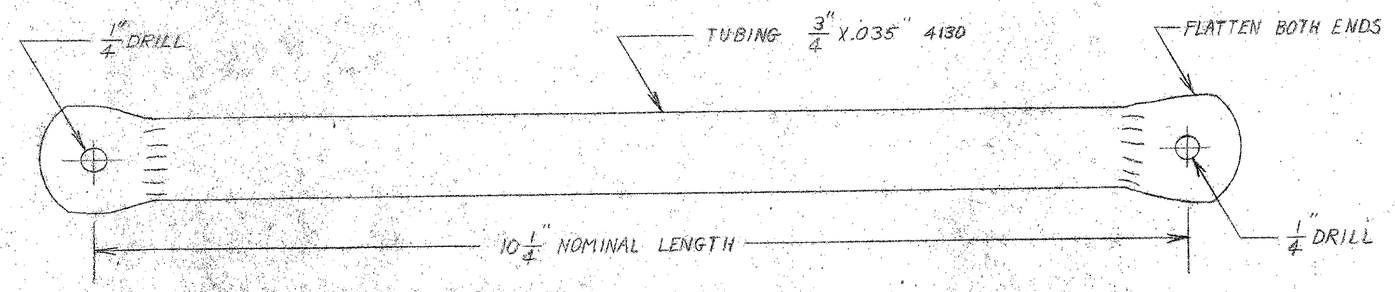

MAST STRUT (2 RQD)

107-100-061

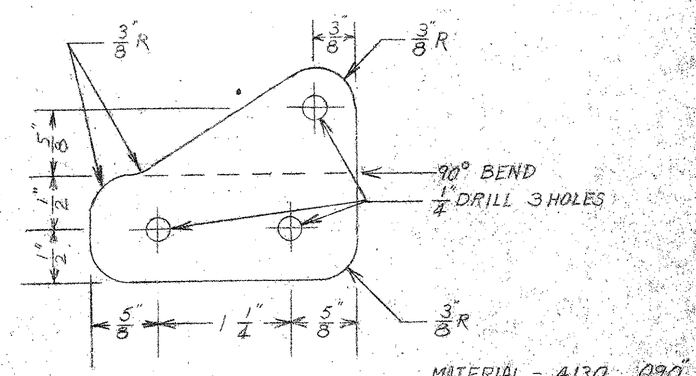

TO BHD

STRUT FITTING (2 RQD-1 R.H.-1 L.H.)

107-100-062

USED SIMILAR BUT DIFFERENT FTG

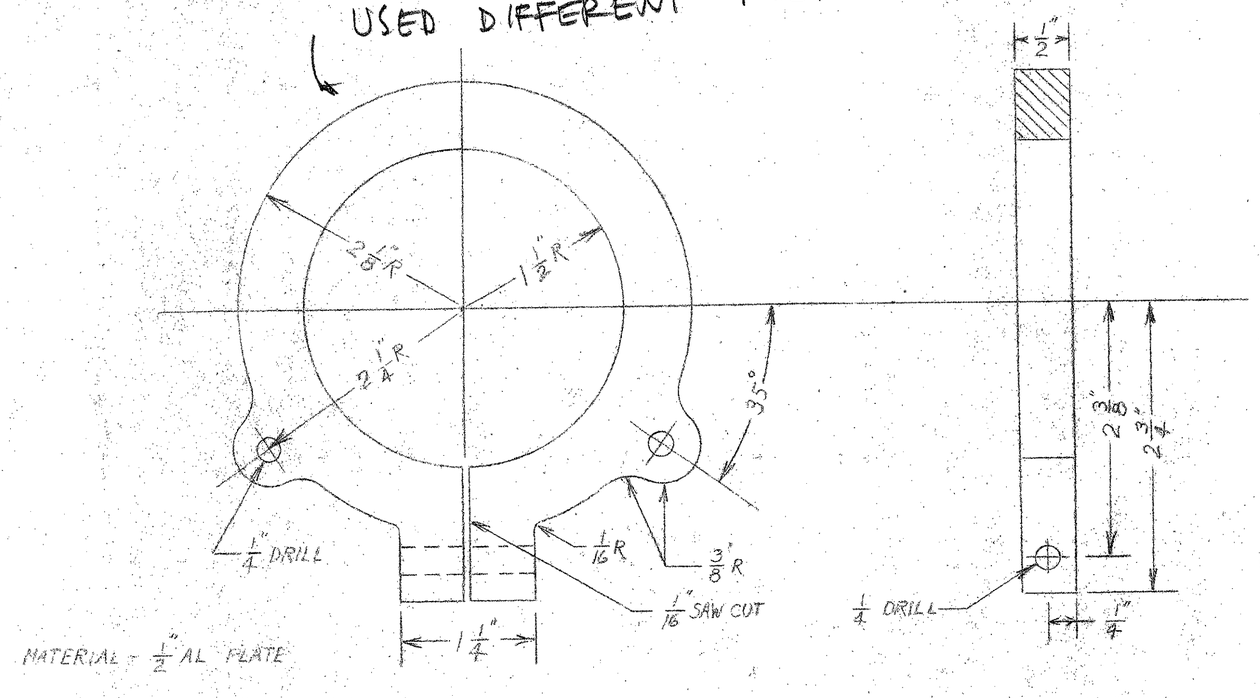

MAST CLAMP

107-100-060

USED @ BULKHEAD

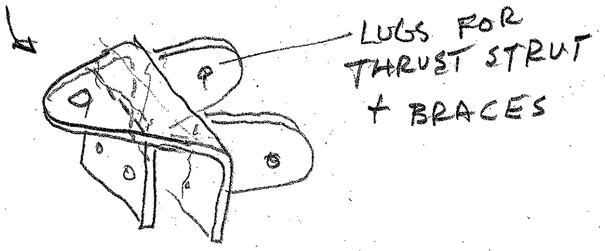

SPRATT CONTROLWING FLYING BOAT		
MAST CLAMP MAST STRUT STRUT FITTING		
DWG NO. 107-100-060/062	DATE 10-12-72	SCALE FULL

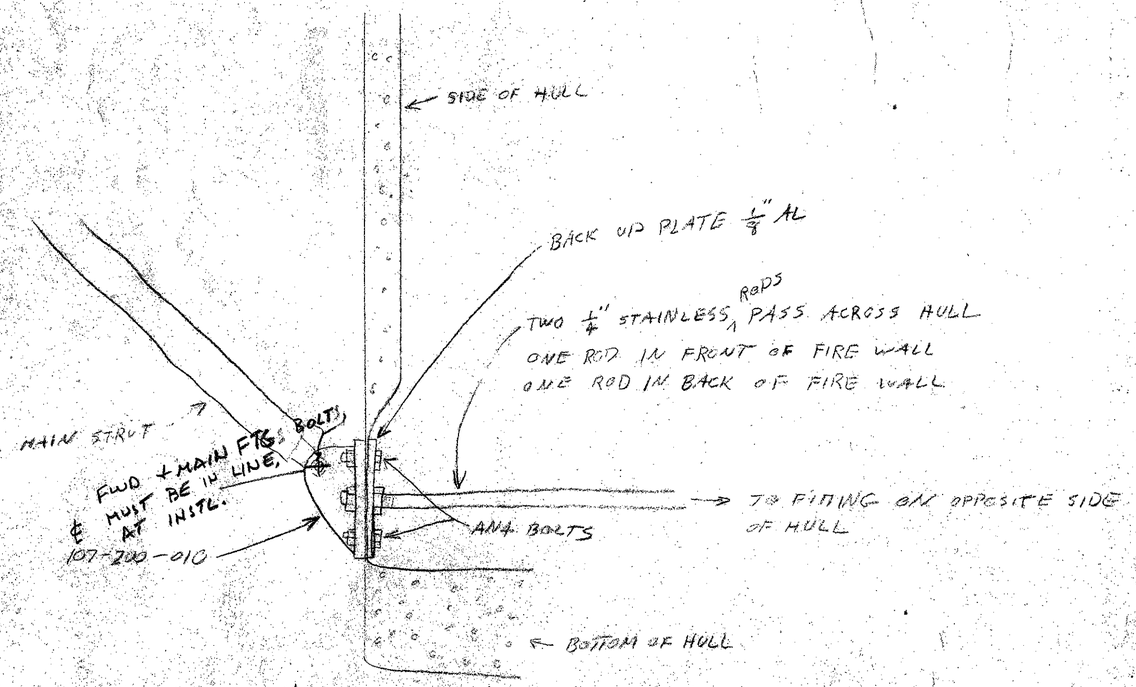

107-2005K-001

POSITION OF MAIN FITTING IS DETERMINED BY FIRE WALL. HOWEVER IT IS AT A SLIGHT ANGLE WHICH MUST BE DETERMINED DURING FINAL SET-UP OF WING

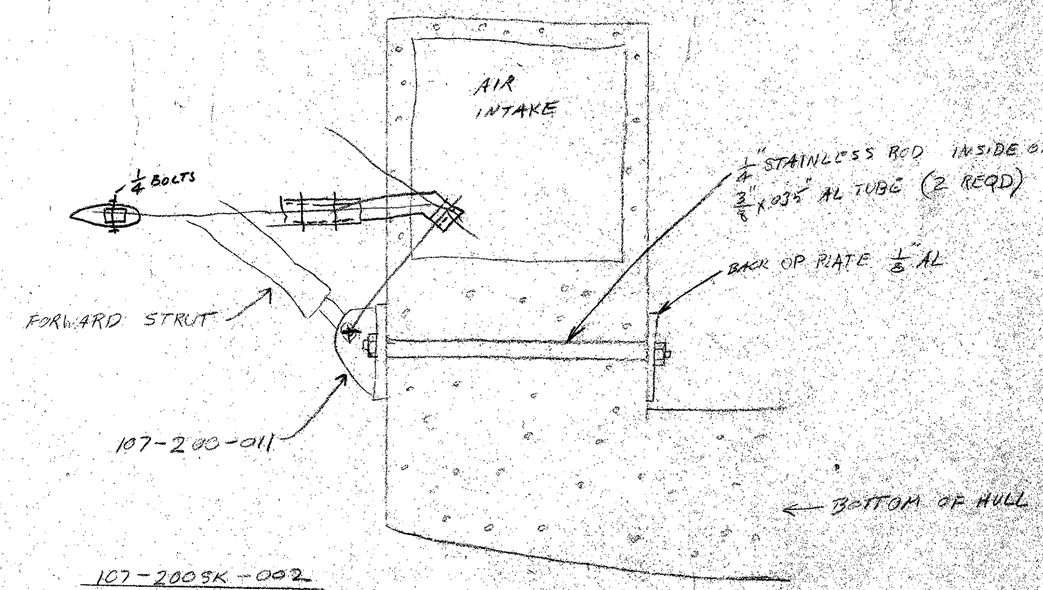

107-2005K-002

POSITION OF FORWARD STRUT FITTING IS DETERMINED DURING FINAL SET-UP THE FITTING ~~[illegible] WHICH MUST~~ BE IN LINE WITH MAIN FTG DETERMINED DURING FINAL SET-UP OF WING

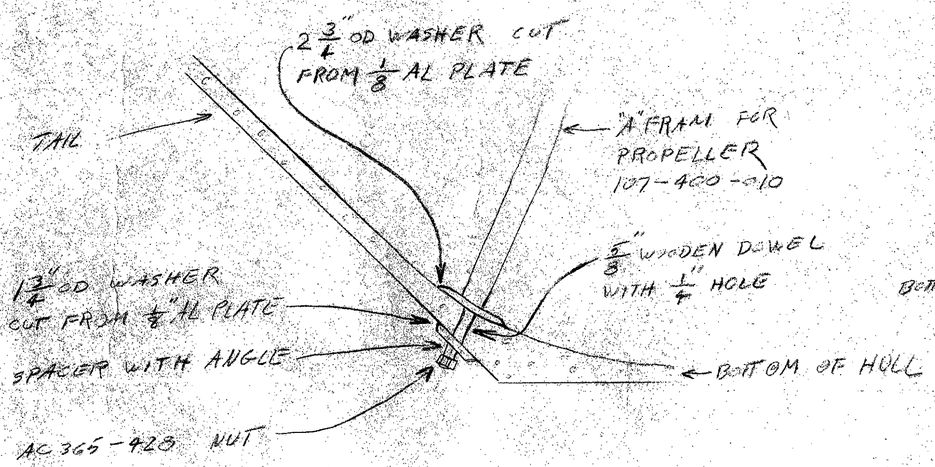

107-2005K-003

POSITION OF PROPELLER "A" FRAME IS DETERMINED DURING FINAL SET-UP

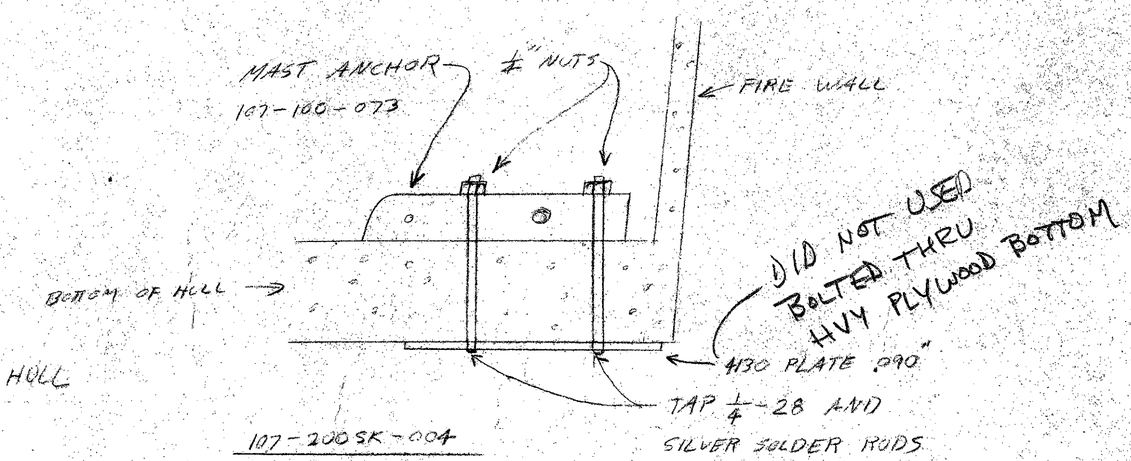

107-2005K-004

POSITION MAST ANCHOR SO THAT REAR END OF COLLECTIVE PITCH CONTROL (107-300-000) AND ROD (107-300-065) DO NOT STRIKE FIRE WALL.

HULL FITTINGS
107-2005K-001/004
5-8-73

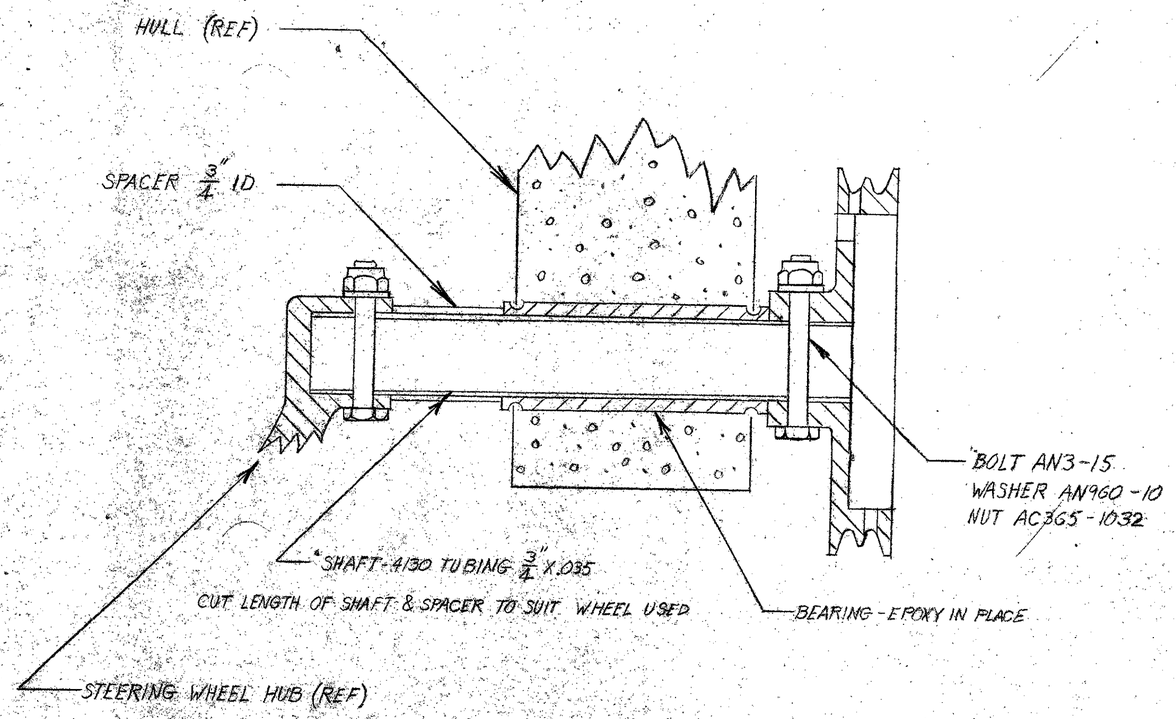

STEERING ASSEMBLY

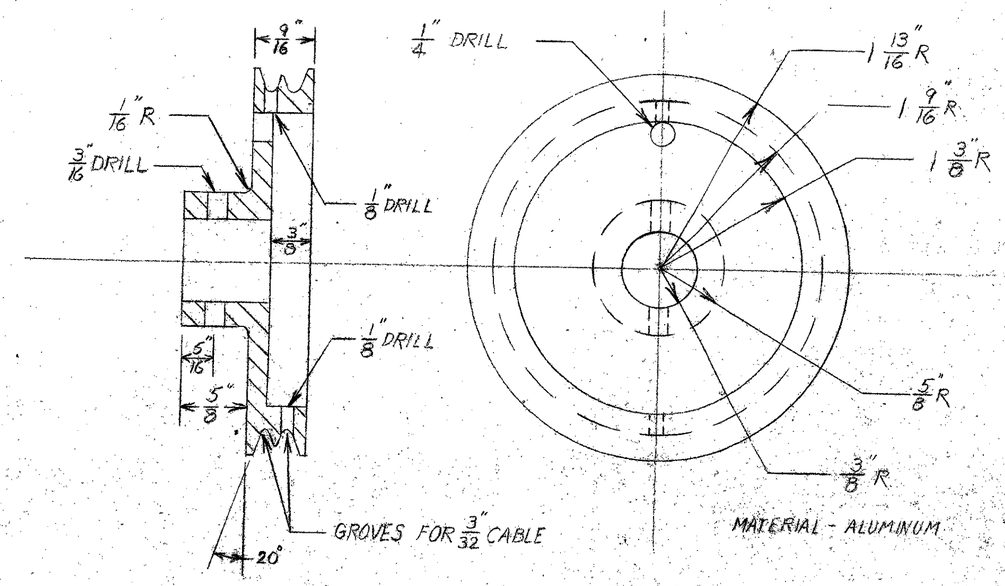

PULLEY 107-300-010

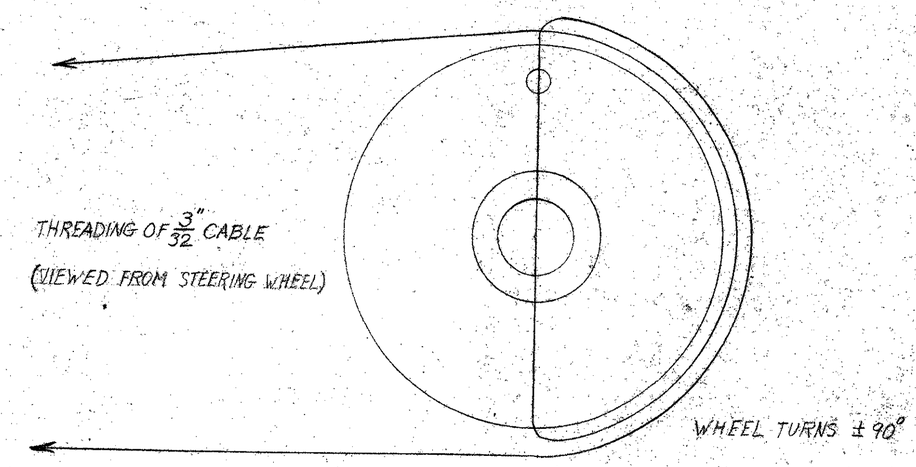

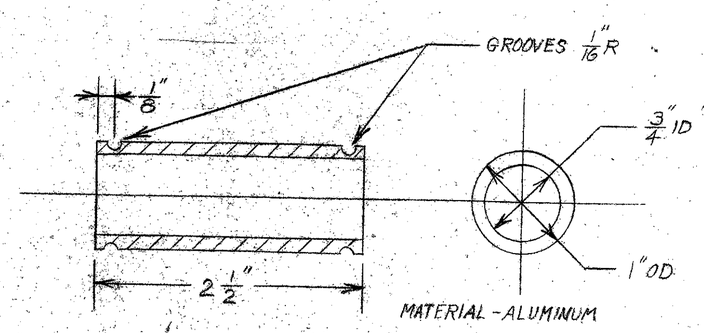

BEARING 107-300-011

USE MODIFIED ARRGT

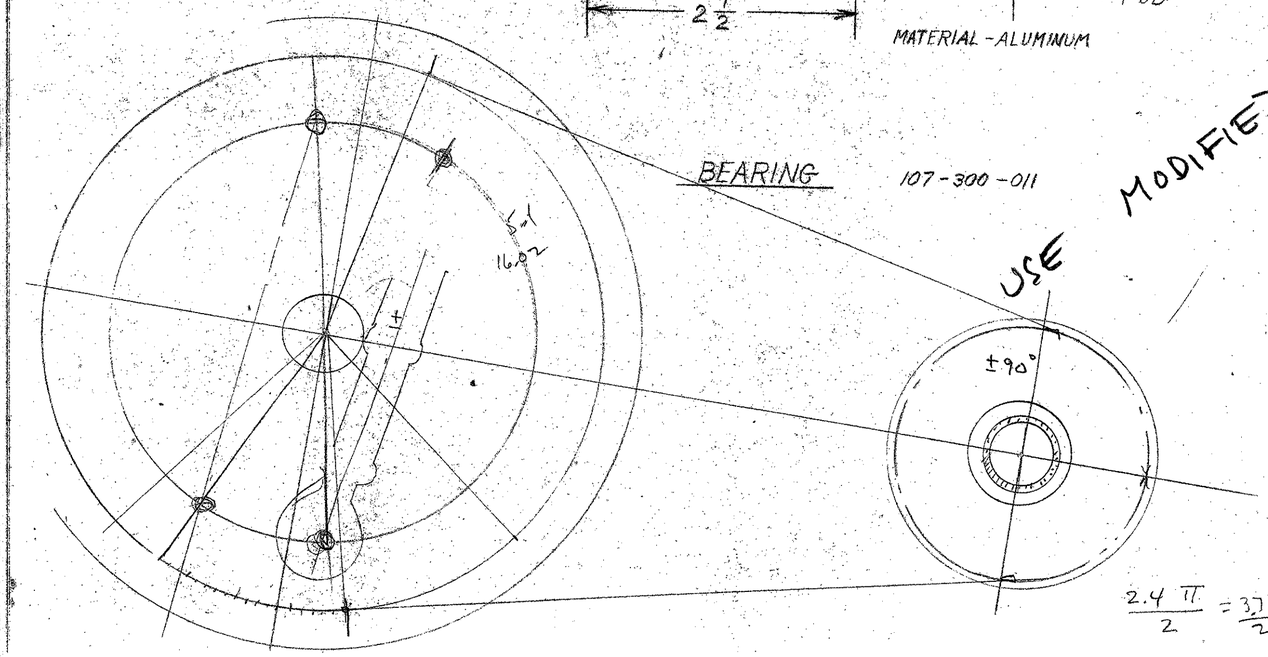

$\frac{2.4\pi}{2} = \frac{3.77}{2} = \pm 1.885$

SPRATT CONTROLWING FLYING BOAT		
STEERING WHEEL ASSEMBLY		
DWG NO: 107-300-010/011	DATE: 11-21-72	SCALE: FULL

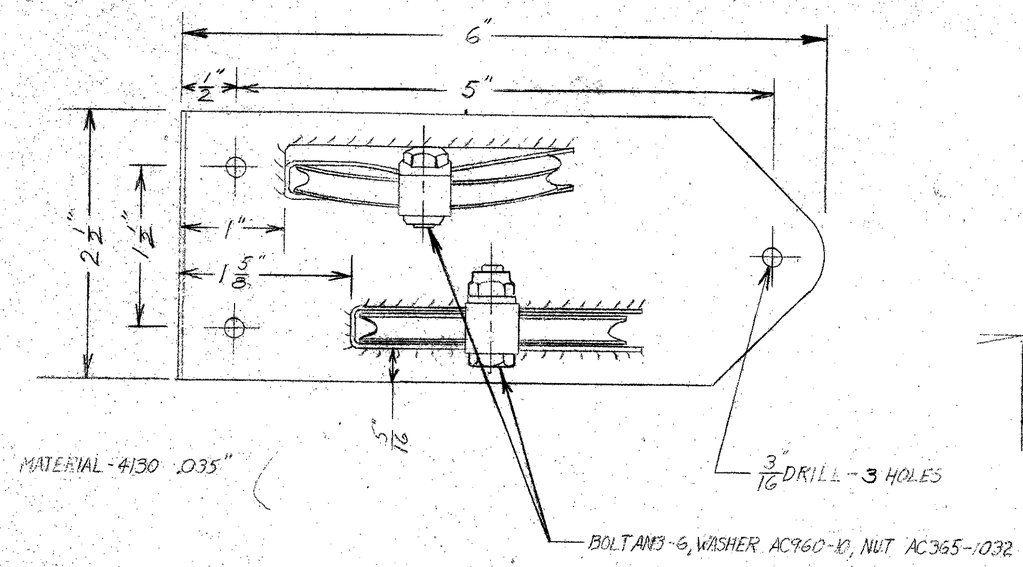

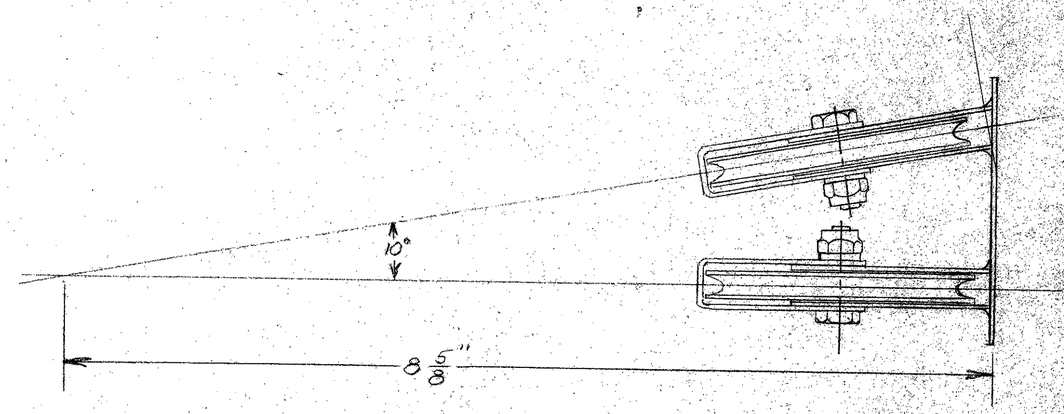

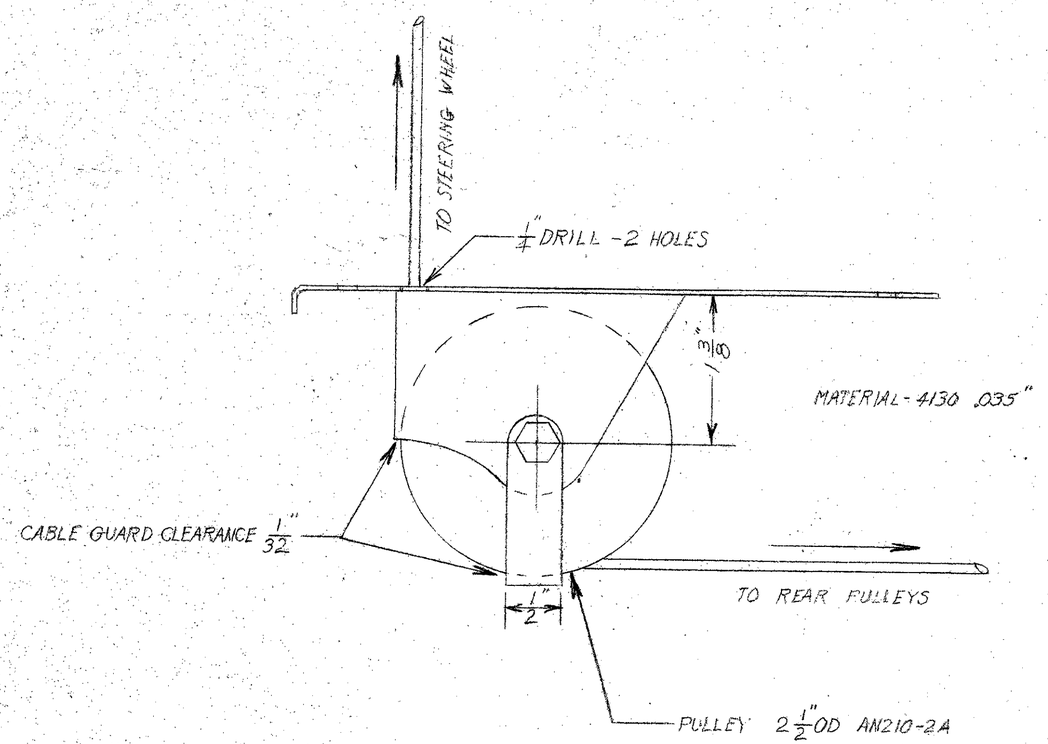

SPRATT CONTROLWING FLYING BOAT

FORWARD CONTROL PULLEYS

REV 6-8-73		
DWG. NO: 107-300-020	DATE: 2-9-73	SCALE: FULL

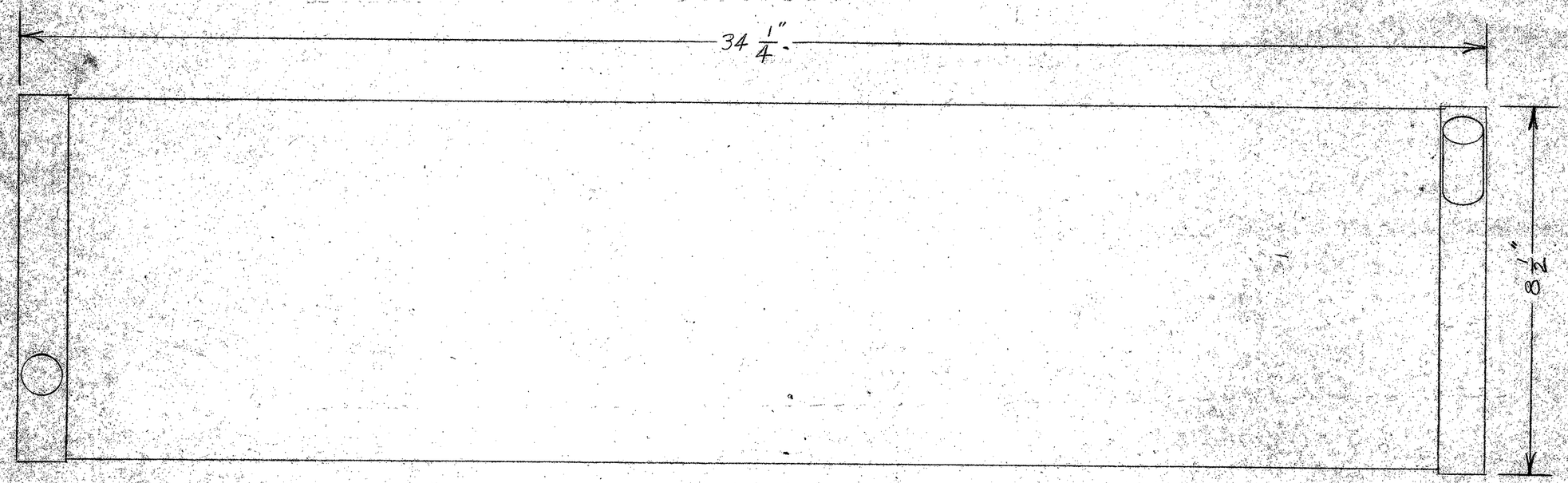

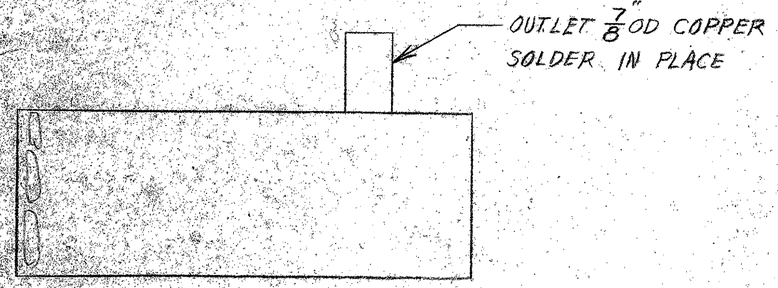

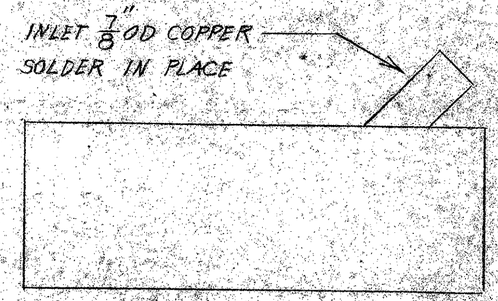

SIZE OF FINS 8 3/8" X 2 5/8"
SIZE OF END TANKS 8 1/2" X 3" X 1"
SIZE OF TUBES 3/4" X 3/32"
NO OF TUBES 43
NO OF LAYERS 3

SPRATT CONTROLWING FLYING BOAT

RADIATOR

DWG NO: 107-400-080	DATE: 5-14-73	SCALE: 1/2

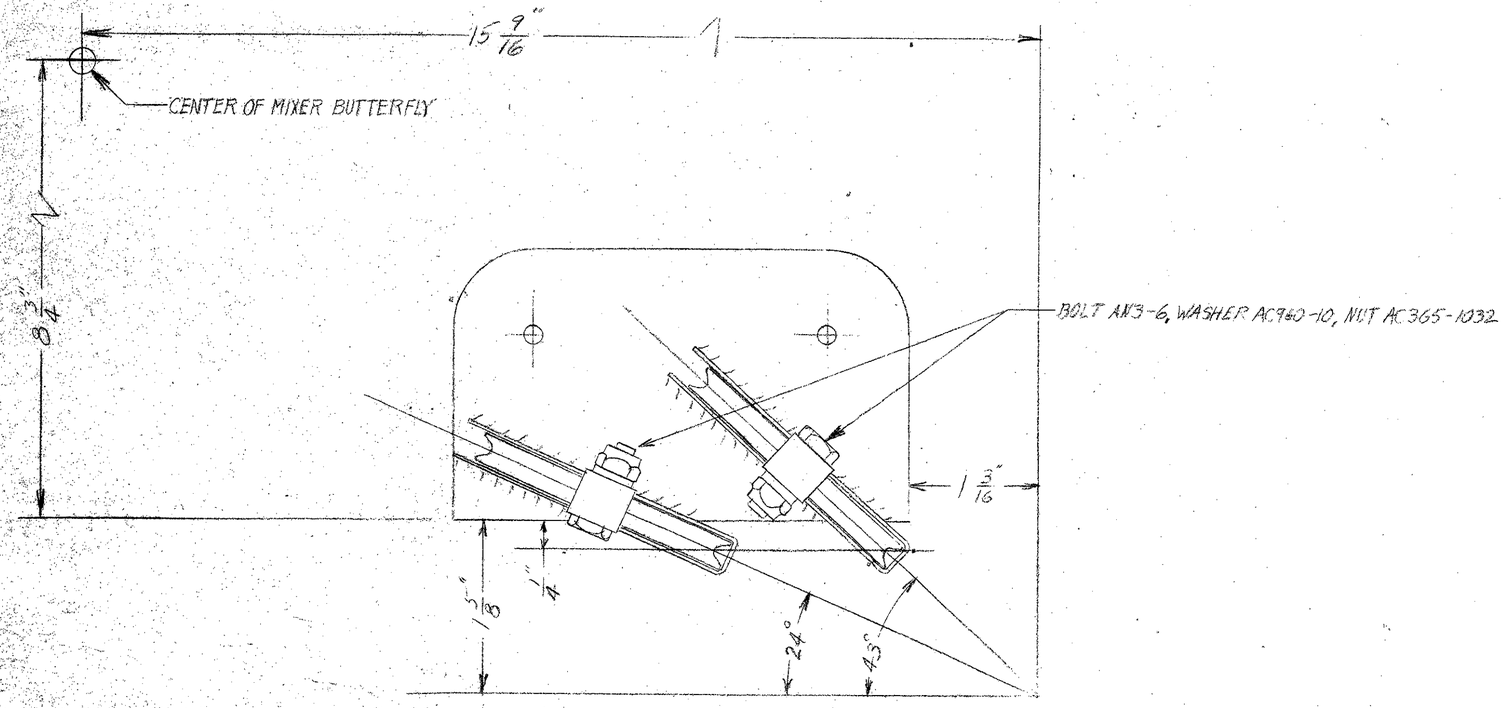

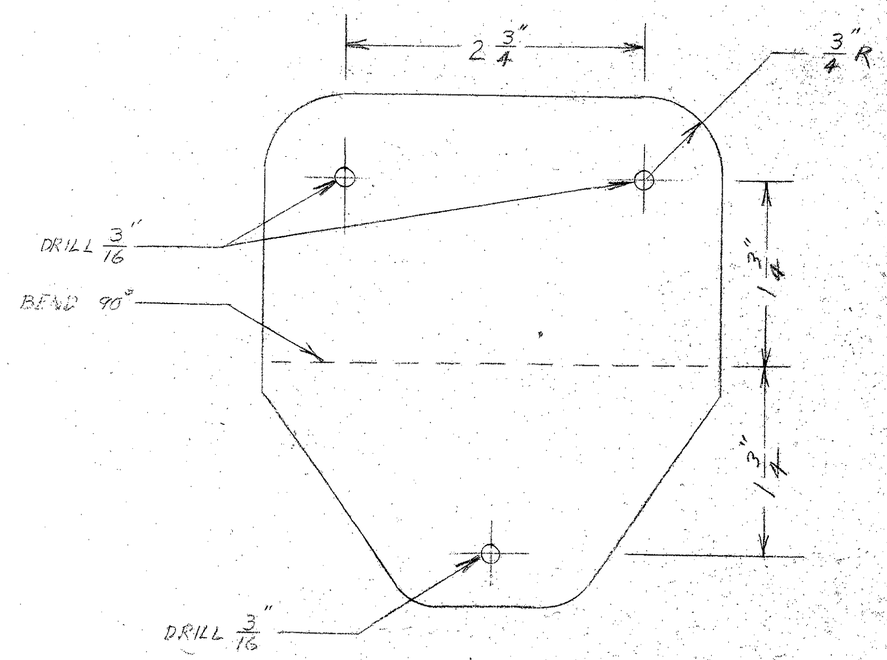

BASE 4130 .035" (1 REQD)

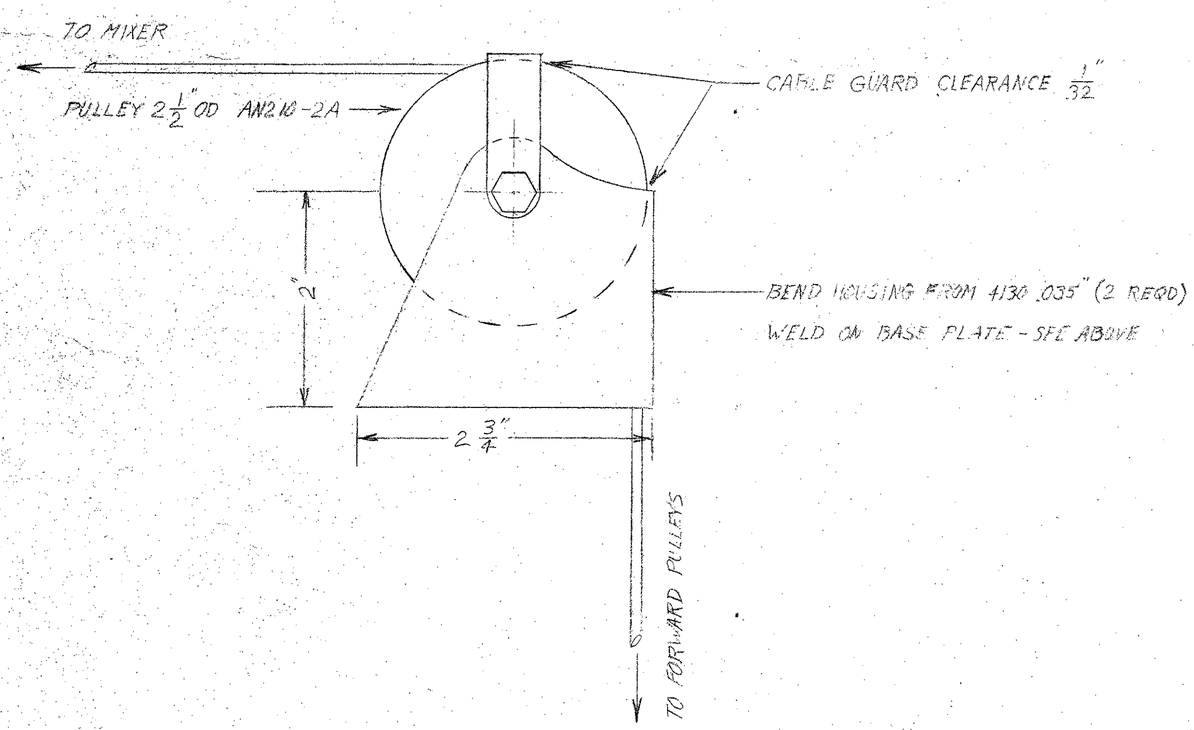

SPRATT CONTROLWING FLYING BOAT		
REAR CONTROL PULLEYS		
DWG. NO. 107-300-030	DATE: 2-7-73	SCALE: FULL

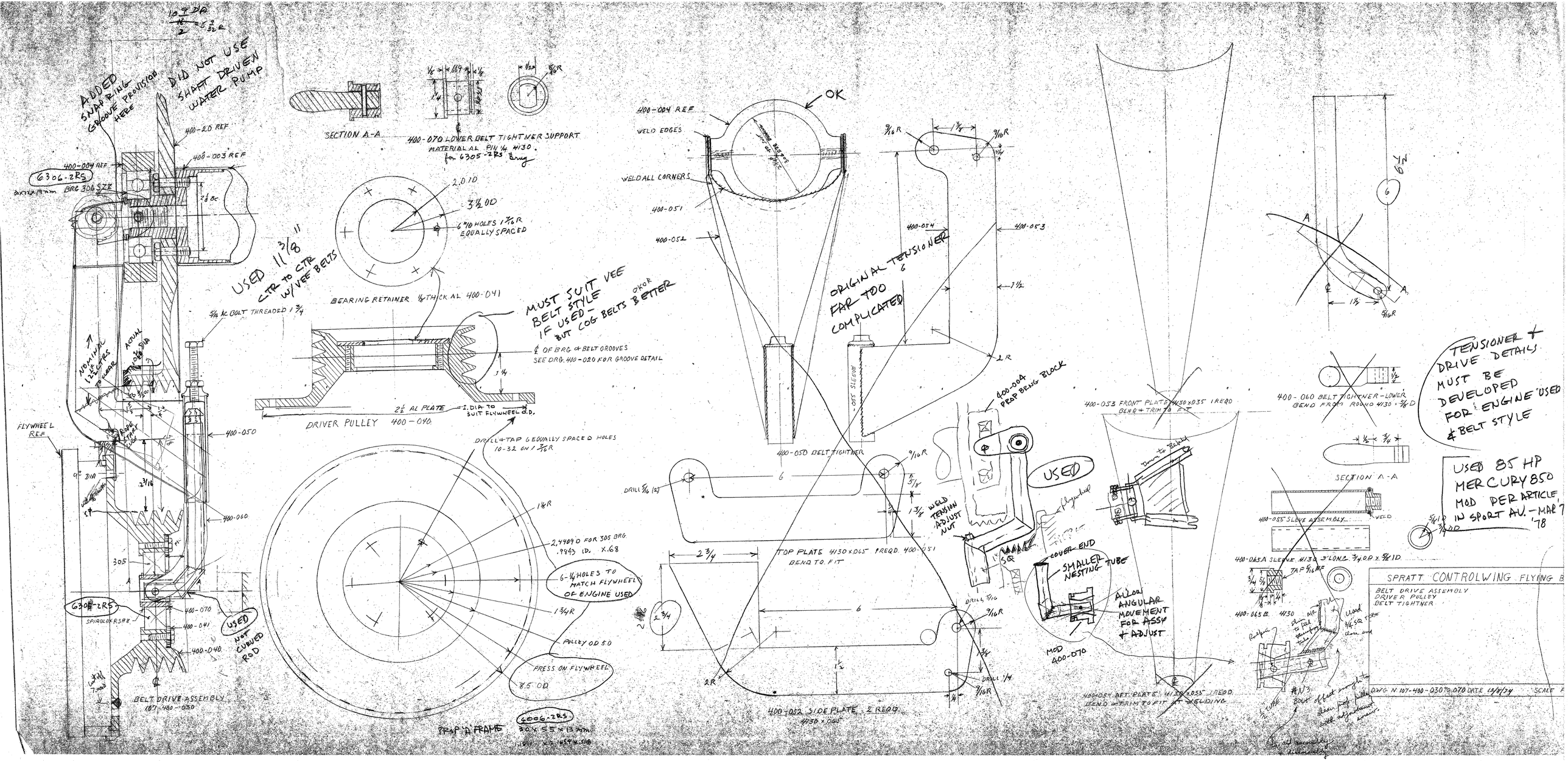

ADDED SNAP RING GROOVE PROVISION HERE
DID NOT USE SHAFT DRIVEN WATER PUMP
400-20 REF
400-004 REF
400-003 REF
6306-2RS
BRG 306 SZZ
SECTION A-A
400-070 LOWER BELT TIGHTNER SUPPORT MATERIAL AL PIN 1/4 4130 for 6305-2RS Brng
2.0 ID
3 1/2 OD
6 #10 HOLES 1 7/16 R EQUALLY SPACED
USED 11 3/8" CTR TO CTR W/VEE BELTS
BEARING RETAINER 1/8 THICK AL 400-041
MUST SUIT VEE BELT STYLE IF USED - BUT COG BELTS OKOR BETTER
5/16 AC BOLT THREADED 1 3/4
℄ OF BRG & BELT GROOVES SEE DRG. 400-020 FOR GROOVE DETAIL
2 1/2 AL PLATE
I. DIA TO SUIT FLYWHEEL O.D.
DRIVER PULLEY 400-040
FLYWHEEL REF
400-050
400-060
305
6306-2RS
SPIROLOX RS98
400-070
400-041
400-040
USED NOT CURVED ROD
BELT DRIVE ASSEMBLY 107-400-030
DRILL & TAP 6 EQUALLY SPACED HOLES 10-32 ON 1 7/16 R
1 1/8 R
2.4409 D FOR 305 BRG .9843 ID. X.68
6-1/4 HOLES TO MATCH FLYWHEEL OF ENGINE USED
1 3/4 R
PULLEY OD 5.0
PRESS ON FLYWHEEL 8.5 OD
PROP 'A' FRAME
6006-2RS
400-004 REF
WELD EDGES
OK
WELD ALL CORNERS
400-051
400-052
400-054
400-053
ORIGINAL TENSIONER FAR TOO COMPLICATED
400-050 BELT TIGHTNER
400-004 PROP BRNG BLOCK
USED
WELD TENSION ADJUST NUT
TOP PLATE 4130 x .065 1 REQD 400-051 BEND TO FIT
400-052 SIDE PLATE 2 REQD 4130 x .065
COVER END
SMALLER NESTING TUBE
ALLOW ANGULAR MOVEMENT FOR ASSY + ADJUST
MOD 400-070
400-053 FRONT PLATE 4130 x .035 1 REQD BEND & TRIM TO FIT
400-054 AFT PLATE 4130 x .035 1 REQD BEND & TRIM TO FIT AT WELDING
400-060 BELT TIGHTNER - LOWER BEND FROM ROUND 4130 x 5/8 D
SECTION A-A
400-055 SLEEVE ASSEMBLY
400-065A SLEEVE 4130 3 LONG 3/4 OD x 5/8 ID
400-065B 4130
TAP 5/16 NF
TENSIONER + DRIVE DETAILS MUST BE DEVELOPED FOR ENGINE USED & BELT STYLE
USED 85 HP MERCURY 850 MOD PER ARTICLE IN SPORT AV. - MAR 7 '78
SPRATT CONTROLWING FLYING B
BELT DRIVE ASSEMBLY
DRIVER PULLEY
BELT TIGHTNER
DWG N 107-400-030 TO 070 DATE 12/8/74
SCALE